EN

TRANSLATED VERSION

Operation and maintenance manual

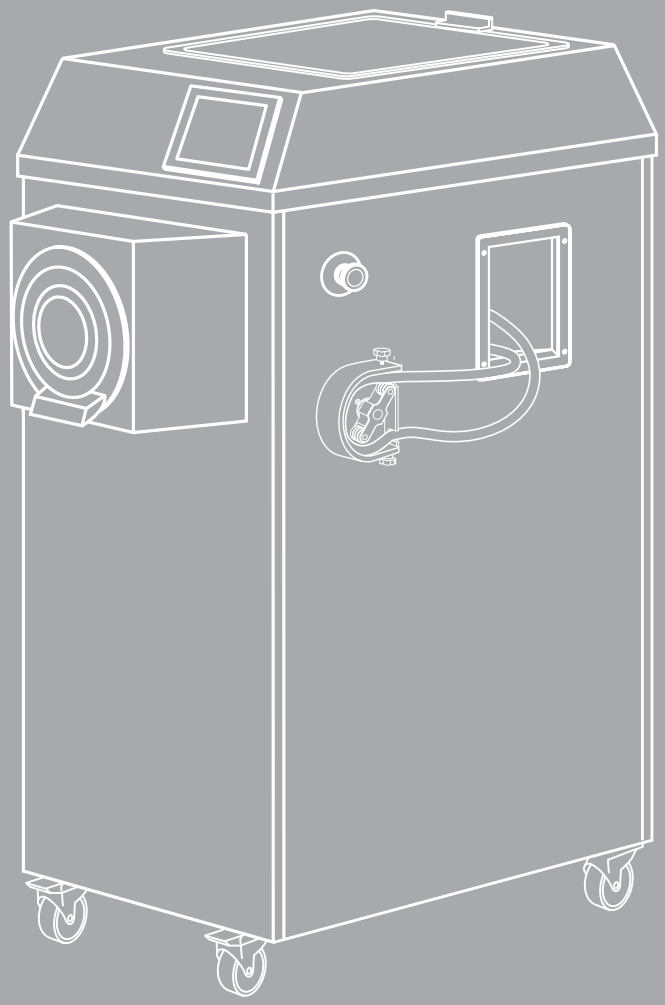

Screw Batch Freezer MAV

Revision 00

Edition 01

LA NUOVAGEL

THE EVOLUTION OF ICE CREAM

Dear customer

We thank you for purchasing the SCREW BATCH FREEZER MAV.

The following manual is supplied with the machine and must be considered an integral and essential part of it.

We recommend carefully reading the instructions given in it before performing any operation, in order to obtain the best performance from your machine.

La Nuovagel reserves the right to make any changes it deems necessary to improve its product or its technical manual, inserting them in subsequent editions, without prior notice.

Technical Support Service

This manual provides the directions required to use, operate and carry out routine maintenance on the BATCH FREEZER to which it refers.
Therefore, all required servicing is governed by the MIXER's conditions of use and its warranty.
Fur any further information, clarification or technical support in general, call our support centre:

Tel. +39 438 489097
mail: info@lanuovagel.com

NOTE - When requesting support or ordering spare parts, always give the BATCH FREEZER identification data (see the BATCH FREEZER Identification section).

Symbols used in this manual

This symbol identifies a situation in which failure to comply with the indicated regulations could cause risks to the machine and to the safety of the operator or exposed persons, with the danger of injury or death.

This symbol identifies some tips and details for operating the machine correctly.

Contents

CAUTION!

Before using the appliance, read the following safety warnings and observe them carefully to reduce the risk of fire, electric shock or personal injury:

Make sure that the voltage is compatible with the voltage range given on the plate, ensure that the socket is earthed and check that it is in good condition.

In order to prevent risks, if the power cable is damaged, it must be replaced by the manufacturer, by the manufacturer's service agent, or by any qualified personnel.

Do not overturn or tip the appliance.
During use, place the appliance on a level surface to prevent it from being overturned.

To reduce the risk of electric shock:
- do not spill water on the power cable, plug or ventilation,
- do not immerse the appliance in water or other liquids,
- do not use the appliance with wet hands, and do not splash water on it.

This appliance is not intended for use by persons (including children) with reduced physical, sensory or mental faculties, or lacking in experience or knowledge.

Do not move the machine during operation.
The wheels must be locked.

Disconnect the machine from the mains power supply, turn off the main switch and disconnect the plug before cleaning, carrying out maintenance or moving the appliance.

Do not insert any kind of object into the appliance

Do not use the appliance for any purpose other than that for which it was designed.

Do not place the appliance near heat sources.

Never clean with abrasive detergent or hard tools.

Do not operate the appliance outside.

Do not use accessories that have not been recommended by the manufacturer.

2.1 General information

The information contained in this manual is the property of “La Nuovagel” : distributing or copying it without written authorisation, even partially, is prohibited.
The BATCH FREEZER was designed in accordance with the Machinery Directive issued by the Council of the European Community (law 89/392/EEC and subsequent amendments) to guarantee safety when used as intended, provided that the instructions given in this manual are always followed.

2.2 Purpose and content of the manual

This manual is intended to provide the information and instructions required by personnel to safely install, operate and carry out maintenance on the BATCH FREEZER. As required by the Machinery Directive, it contains all the general information, instructions and information required for installation, a description of the controls, the procedures for starting and operating the BATCH FREEZER safely and for normal servicing.
The topics are divided into sections, which are further divided into progressively numbered paragraphs and sub-paragraphs.

2.3 Spare parts

We recommend that you only use original “La Nuovagel” spare parts.
Spare parts must be ordered from the Support Service, taking care to always give the BATCH FREEZER identification data and the spare part code. (Para. 6.3)

2.4 Warnings about using the manual

2.4.1 Purpose and limits of the manual

This manual is intended for all the operators involved in using and supervising the BATCH FREEZER throughout its period of use. The purpose of the manual is to provide information about:
1. The BATCH FREEZER technical specifications.
2. Preparing the workplace with regard to the environmental characteristics and power sources.
3. Accident prevention regulations and information about the safety devices on the BATCH FREEZER.
4. Using the BATCH FREEZER as intended by design.
5. Obtaining spare parts.
The manual cannot in any way replace the operators’ specific training, which must have been previously done on similar appliances or which can be done on this BATCH FREEZER under the guidance of personnel who have already been trained.

2.4.2 Keeping the manual

The manual is considered an integral part of the BATCH FREEZER and must be kept for future reference until the BATCH FREEZER is finally dismantled.
The manual must always be available for consultation and must be kept carefully in a safe place, protected from dust and humidity. In the event of damage that compromises its consultation, even partially, the user must request the manufacturer for a new copy.

3.1 General information

CAUTION!

The information contained in this section only refers to the BATCH FREEZER and, if necessary, should be supplemented with information about the safety standards regarding the plant/structure in which the BATCH FREEZER is used

This section contains the information prescribed by the Machinery Directive that is essential for compliance with safety regulations in a general sense, assessment of the risks due to using the BATCH FREEZER and the environmental conditions of use.
Failure to follow the instructions given in this section and further instruction contained in this manual could render the design safety conditions ineffective and could cause injury to those working with the BATCH FREEZER.

3.2 Reference standards

The BATCH FREEZER as a whole and the individual parts from which it is made have been designed in accordance with the EC harmonised standards in force, as well as other European and Italian standards that are applicable in accordance with the Machinery Directive issued by the Council of the European Community (89/392/EEC directive and subsequent amendments).
The following are the main harmonised standards considered:
EN 292-1, EN 292-2, EN 294, EN 414, EN 60204-1, 89/109/EEC, 2006/95/EC Directive, 2004/108/EC Directive

3.3 Environmental operating conditions

1 - Temperature and humidity

The BATCH FREEZER must be used in a room with an ambient temperature from + 5 °C and + 35 °C and relative humidity below 85%.

2 - Operating environment

The BATCH FREEZER must be sheltered from the elements (rain, hail, snow, fog, etc.) and only be used in an industrial/artisan environment.
The BATCH FREEZER must not be used in an explosive or partially explosive atmosphere: using it in these conditions is therefore prohibited.

3 - Lighting

The room in which the machine is installed must be lit in such a way that the buttons, controls and emergency stop devices can be easily seen.
(Good industrial lighting for medium accuracy work is, indicatively, 300-600 lux).

4 - Residues and environmental contamination

We request the user to comply with the regulations and directives in force in the BATCH FREEZER country of use regarding the treatment of any lubricants and fluids used in it.

3.4 General safety regulations

The BATCH FREEZER configuration and the related safety devices comply with the requirements of the machinery directive issued by the Council of the European Community.
Failure to apply these prescriptions could render the design safety conditions ineffective.

The personnel who operate and supervise the BATCH FREEZER must be trained by their employer about the risks of accidents, the safety devices installed on the BATCH FREEZER and the general accident prevention rules given in the EC Directives and/or the laws in force in the machine's destination country.

The personnel who operate the mixer, must be in optimal physical and psychological condition and must not be under the effect of substances, which by their nature, can alter perception or slow down reflexes.

Children or unsuitable persons, who must also be kept away from the BATCH FREEZER, must never operate the BATCH FREEZER.

"La Nuovagel" declines any liability for damage to the BATCH FREEZER or for physical injury the operator or third parties due to failure to comply with the safety regulations given in the technical documentation provided with the BATCH FREEZER.
Before starting work, the operator must fully understand the BATCH FREEZER characteristics, and the position and functions of all the controls. He must also have read and understood all of this operation and maintenance manual and any reference publications.

CAUTION!

The BATCH FREEZER must only be used by operators who take part in on-site training by "La Nuovagel" personnel (if included in the supply contract) and/or that have understood the instructions given in the reference publications.

The instructions, warnings and general safety rules given in the reference publications or on the signs applied to the BATCH FREEZER must be observed completely.

Unauthorised tampering with or replacement of one or more of the BATCH FREEZER parts, or using accessories, tools or consumables other than those recommended by the manufacturer, can be hazardous to the operator's safety and relieves the manufacturer from any civil or penal liability.

3.4.1 Clothing

The clothing worn by those who operate or carry out maintenance on the BATCH FREEZER must always be suited to the type of work being done. Moreover, it must comply with the safety requirements laid down by the laws in force in the BATCH FREEZER country of use.
Generally, the operator must wear safety shoes with non-slip soles, and therefore the use of loafers, clogs, slippers or other types of footwear that could compromise the persons mobility. The clothes worn must be suited to the work to be done.

CAUTION!

Do not wear bracelets, watches, rings, chains, ties or similar accessories and garments that could hang, hinder movement or create the possibility of entanglement while operating the BATCH FREEZER. Tie up long hair and protect it with a suitable cap for the same reasons listed above.
Clothing must be consistent with the regulations in force regarding working with foodstuffs.

3.4.2 Access to the work area

To allow the operator to move freely, the work area (especially the areas where the control panels and emergency buttons are installed) must never be occupied by material or anything else. Personnel must be able to access the BATCH FREEZER immediately in the event of an emergency. Use suitable signs to prohibit access to the work area by persons who are not directly involved in operating the BATCH FREEZER.

Children or unsuitable persons, who must also be kept away from the mixer, must never operate the BATCH FREEZER.

During maintenance, especially when working with open guards or safety devices disconnected, which is only allowed by formally authorised and trained personnel, pay the utmost attention to ensure that the work area cannot be accessed be persons other than those directly involved in the work.

When the work is finished, check that none of the tools used have been left inside the BATCH FREEZER and that any guards removed have been put back in place.

3.5 Risk assessment

The information given in this paragraph is only related to the BATCH FREEZER and therefore the user must supplement it with the risk assessment related to the plant in which the BATCH FREEZER is installed.

3.5.1 Premise

The risks due to using the BATCH FREEZER were mainly assessed using the methods indicated in the relevant harmonised standards and the European Directives: the results of this analysis and the safety measures adopted to remove or reduce the risks for the user are reported in this chapter.

3.5.2 Risks associated with the installation environment

There may be risk conditions in the environment in which the BATCH FREEZER is installed that could prejudice its correct operation and the safety of the personnel who operate and carry out maintenance on it.

Floor

The BATCH FREEZER must be placed on a surface that is able to guarantee the correct support and levelling over time.
If the mixer is installed on a raised surface, e.g. a table, it should be flat and level, with an adequate structure and have a surface that prevents the BATCH FREEZER from slipping.

Temperature and humidity

The prescribed temperature and humidity must be guaranteed. High positive or negative peaks in the temperature or humidity could cause the components that make up the BATCH FREEZER to function incorrectly (e.g. condensation inside the electrical panel). Position the BATCH FREEZER away from heat sources and protected from spray.

Pollutant materials

It is necessary to preventively assess potential damage to the BATCH FREEZER caused by using materials that are considered pollutants in the work environment, such as:
• DUST, which could, for example, accelerate wear of the seals or components.
• MAGNETIC FIELDS due to electrical lines passing near the electronic equipment installed in the BATCH FREEZER, which could cause noise and malfunctions.
• TOXIC SUBSTANCES (gas, vapours etc.) in the work environment.

CAUTION!

The user is responsible for ensuring that BATCH FREEZER is installed in a suitable place in order to safeguard its integrity over time.

3.5.3 Risks associated with the Batch Freezer characteristics

In accordance with the directive in force, all areas of the BATCH FREEZER subject to intrinsic risks inherent to the nature of the work process or to the BATCH FREEZER structure, were analysed.
Where technically feasible, appropriate measures have been taken to reduce, if not remove, possible risks to the exposed persons by equipping the BATCH FREEZER with a series of approved fixed and mobile protection devices, which effectively prevent access to the hazard areas during operation (refer to the Residual risks paragraph).
However, bear in mind that the best safeguard for the operator's safety is that he always exercises caution and common sense. The experience the operator acquires using the BATCH FREEZER over time will also contribute to improving the safety margins at work.

3.6 Safety

The BATCH FREEZER is equipped with safety devices that are able prevent injury to the operator and any exposed persons, and to protect the BATCH FREEZER itself from accidental damage.
All persons operating the BATCH FREEZER, or who will come into contact with it, must carefully read the following paragraphs, which describe the so-called “risk” areas and related safety measures. They also describe the so-called “residual risk” areas, which are the areas where a certain degree of danger remains, despite the measures taken.

The user is responsible for ensuring that BATCH FREEZER is installed in a suitable place in order to safeguard its integrity over time.

The safety devices must not be removed or disabled for any reason; any operations on the BATCH FREEZER deliberately excluding the safety devices or any type of manipulation of the devices is at the risk of whoever carries them out.

Nuovagel does not assume any liability for damages to things, people, directly or indirectly, caused by the operation of the machine in unsuitable conditions or not respecting the instructions given in this manual.

3.6.1 Safety devices

The MIXER is equipped with a set of protection devices to protect the operator and any exposed persons from risks and hazards of any kind that could happen during the BATCH FREEZER normal working conditions.
The devices installed on the BATCH FREEZER can be divided into two types:

Passive safety devices - are the devices that physically prevent access to a certain area during automatic operation of the machine (e.g. perimeter barriers, panelling, etc.).

Active safety devices - consisting of all those protective devices which prevent access to certain areas or to block the operation of BATCH FREEZER when the safety conditions are not those requested.
The joint action of both types of safety devices guarantees compliance with the safety conditions by placing the operator and any people exposed to complete safety from risks and hazards.

CAUTION!

Any tampering with safety devices by the user (or by anyone appointed by the user) is prohibited and relieves "La Nuovagel" from any liability, rendering the user solely liable to the bodies responsible for prevention of accidents at work.

3.6.2 Description of the safety devices of the BATCH FREEZER

The BATCH FREEZER has the following safety devices:
I**NSULATING PANELS:** preventing access
to the internal parts. The removal of the panels is possible only with a specific tool.
Protected parts:
a) Electric panel.
b) Motion transmission of the freezing scroll

EMERGENCY BUTTON: is located in the top part on the side of the machine. Generally speaking it is the result of the effect of the stop button, which is operated in emergency and therefore can be summarized:
• Immediate stop and safely of all organs of
electric drive.
The resumption of the normal operating cycle, after removing the cause of the problem detected, is only possible by rearming the emergency button and following the start-up procedure described in the section (Restart production post-interruption).

CAUTION!

Keep the emergency stop button clear of objects, clothing, etc. that could obstruct or delay its operation.

Only use the emergency stop button in situations that are hazardous to the operator or the BATCH FREEZER.
USING THIS DEVICE FOR NORMAL STOPPING CONTRAVENES THE SAFETY REGULATIONS AND COULD DAMAGE THE MIXER.

3.6.3 Danger signs

There are danger warning signs to highlight the areas of the BATCH FREEZER where it is necessary to pay particular attention and the areas of residual risk to the operator and exposed persons.

CAUTION!

Removing the signs or failing to replace them if they have deteriorated, means that the user takes full liability for all the consequences that may arise or result from using the BATCH FREEZER without complying with the safety conditions prescribed by the manufacturer.

3.7 Warranty

"La Nuovagel" guarantees the SCREW BATCH FREEZER MAV for 12 months from the date of sale.

Within the above mentioned terms, "La Nuovagel" undertakes to replace, free of charge to the customer, those parts that, in its judgement, have manufacturing defects.
The warranty excludes labour for assembling, disassembling and replacing the defective parts, and also excludes transportation costs of the parts sent for replacement.
Recognition of liability by "La Nuovagel" excludes cancellation of the contract and any and all other liability or obligation, either total or partial, for other expenses or damages resulting from using the appliance.

The warranty does not cover deficiencies and defects due to normal wear of those parts which, by their nature, are subject to rapid and continuous wear.
In particular parts considered subject to wear are:
- **Scroll**
- **Emulsifying Blade**
- **Tank mixer**
- **Seals and O-Ring**

"La Nuovagel" is not liable for defects arising from the user operating the appliance incorrectly, or due to modifications or repairs carried out by the user or by third parties without the written consent of "La Nuovagel", independently of the relationship between those modifications or repairs and the events.
The manufacturer is only liable for defects inherent to the supplied parts that have occurred in compliance with the intended conditions of use (see the Intended use of the BATCH FREEZER, Improper use of the BATCH FREEZER and Prohibited use paragraphs).
The user must directly notify "La Nuovagel" of any claims within eight days from receiving the appliance or a spare part, by filling in the dedicated form, which will be considered by "La Nuovagel" for acceptance.
"La Nuovagel" may refuse to accept appliances sent for servicing without their original packaging.

Material replaced under warranty must be kept by the buyer and made available to "La Nuovagel", that will decide whether it should be returned at its own expense or not.

The warranty shall expire if the buyer has not fulfilled its contractual obligations.

If in the event of a valid claim, the buyer cannot withhold payments or other obligations related to the purchase.

This warranty cancels and substitutes all other forms of guarantee, express or implied. Any amendments have no value, if not stated in the official document issued by "La Nuovagel"

3.7.1 Support

On request, "La Nuovagel" provides a support service for installation and maintenance of the machine.

4.1 Batch Freezer Identification

The BATCH FREEZER main identification data is printed on the plate attached to the main body of the appliance.

The plate gives the following data:
- Nominal power supply voltage
- Nominal frequency
- Nominal power
- Weight
- Serial No.: Model + progressive number

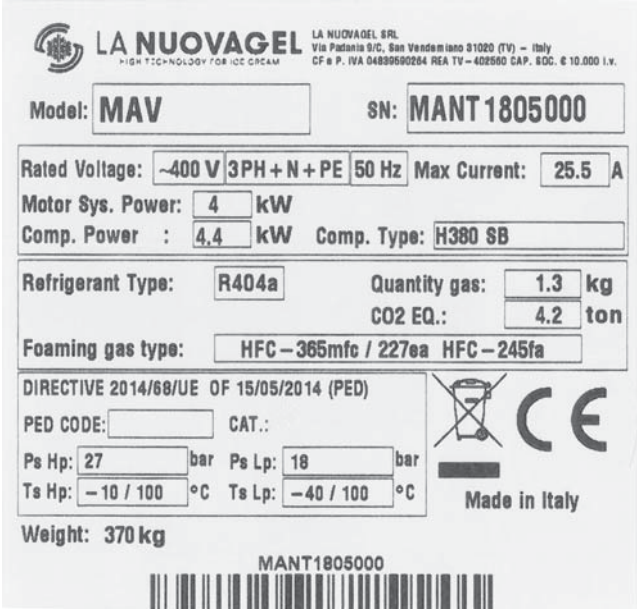

4.2 Marcatura CE

The BATCH FREEZER has a CE mark to testify its conformity to the directive of the Council of the European Community.
The marking is located on the BATCH FREEZER identification plate.
An original signed copy of the "Declaration of CE Conformity" is supplied together with the BATCH FREEZER. The BATCH FREEZER owner MUST KEEP this document carefully, to be shown to the competent authorities on request.
The "Declaration of CE Conformity" document is an integral part of the line, and must be delivered to the new owner if sold.

Features:

Electrical power supply: 400V 3Ph+N+PE 50Hz
Installed electrical power: 6500 W
Average consumption of cooling water: 4 lt/min
(referring to the incoming water temperature 15° C)

4.3 Overall dimensions

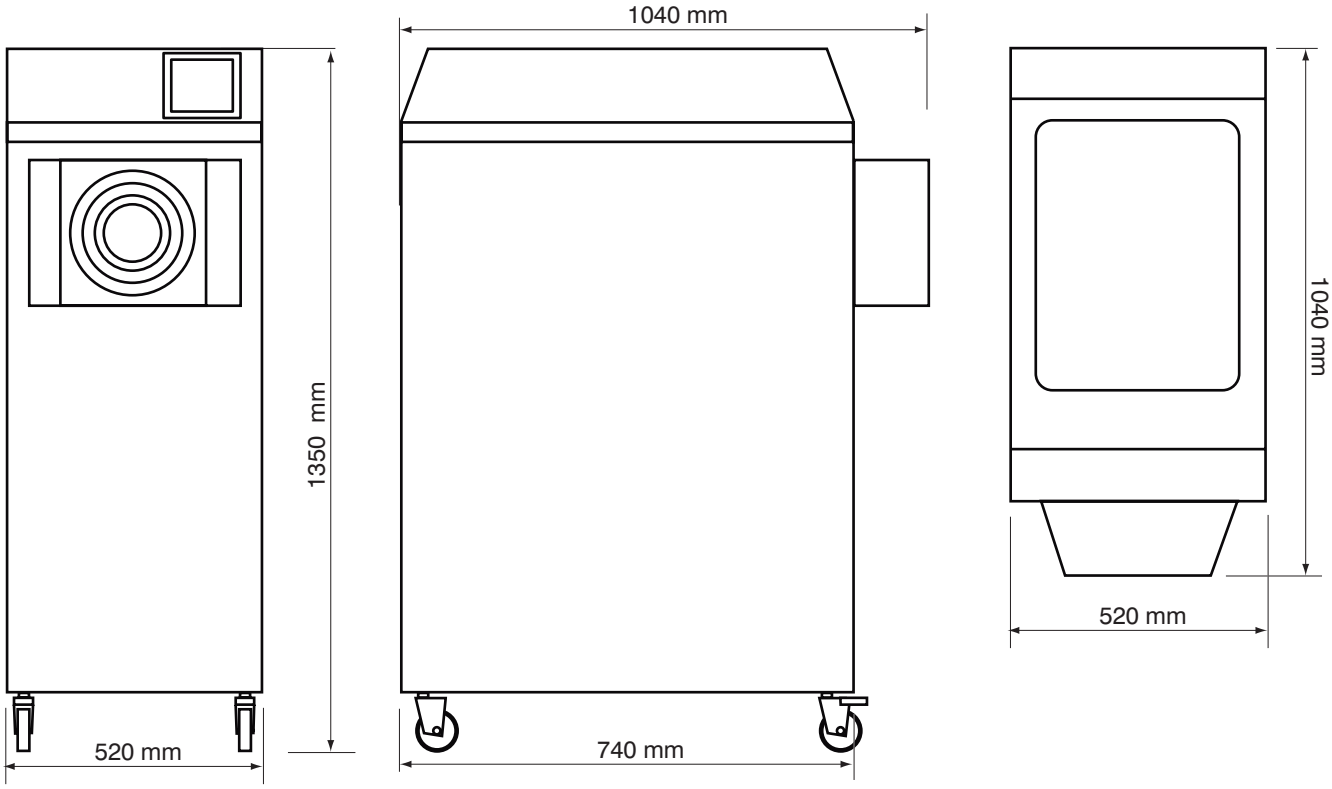

front view **side view** **top view**

4.4 Preliminary operations

Strictly follow the operations listed below to prepare the BATCH FREEZER correctly in its work area.
The BATCH FREEZER is supplied with adequate packing to protect it from damage during transportation.
The packing may be of various types: a cardboard box with a wooden bottom, wooden crate etc.
We advise you to keep the packing for the whole warranty period. “La Nuovagel” may refuse to accept appliances sent for servicing without their original packaging.
The package dimensions are: 600x1250x1450 h mm

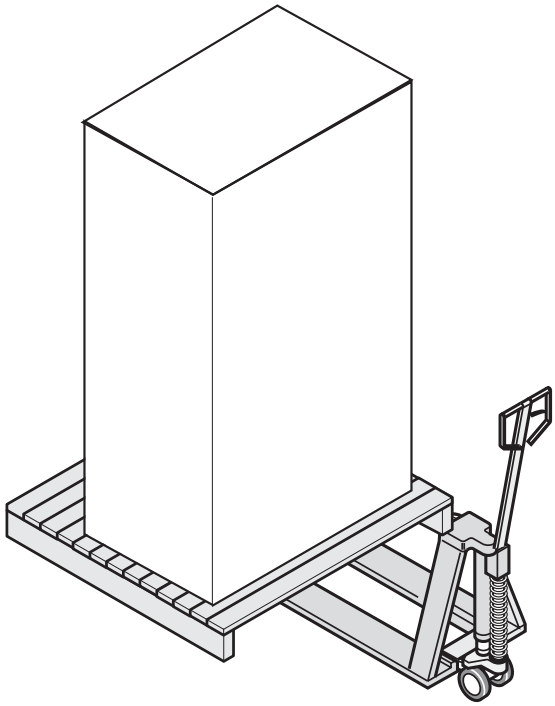

4.5 Unpacking

Despite the BATCH FREEZER being equipped with wheels, it is preferable to move it to the established work area with the aid of a pallet truck. DO NOT LIFT THE BATCH FREEZER BY HAND.

CAUTION!

The maximum weight that can be lifted by an adult is 25 kg for a male and 20 kg for a female. Greater force could lead to the onset of musculoskeletal problems.
The operators must wear the necessary protection (Protective gloves and safety shoes).

Before removing the BATCH FREEZER from the packing, check that there is no obvious damage to the container. If there is, photograph the external damage.

Remove the protective cover used for transport paying attention not to damage the BATCH FREEZER.
Remove the protective steel sheet taking care not to scratch the BATCH FREEZER.
NEVER USE SOLVENTS OR CHEMICAL DETERGENTS, which not only constitute a potential hazard to health, but can cause damage to rubber seals, plastic components and coatings.

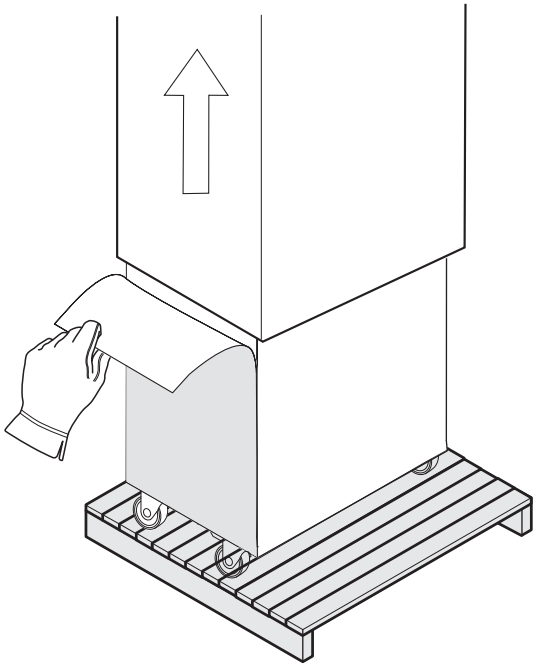

4.6 Electrical connection

Check that the local power line characteristics correspond to those indicated on the name plate of the BATCH FREEZER.

The BATCH FREEZER comes with two meters of electrical cable, fire retardant according to IEC 2022-II, **5x4mmq.**

The plug connection will be up to the installer considering the type of power supply **3P+N+PE** and the minimum output current of **20A.**

Wiring diagram of the power plug:

• Connect the grounding wire (GREEN/YELLOW) to the PE terminal.

• Connect the phase wire (BROWN or BLACK or GREY) to the corresponding phase terminals.

• Connect the neutral wire (BLUE) to the corresponding terminal.

Once the electrical connection of the BATCH FREEZER has been completed switch on the power at the main switch. You MUST check the direction of rotation of the motor, which must be:

ms = Blades turn ANTI-CLOCKWISE.

mc = Archimedes screw turns CLOCKWISE.

The problem of motors rotating in the opposite direction in machines with the inverters should not occur. If this occurs, contact the customer service.

WARNING!

The electrical connection of the BATCH FREEZER without prewired plug must be carried out by qualified technical personnel (electricians maintenance workers).

To ensure the safety of the operator, the mains supply must be protected by a differential circuit breaker, 20A max. and sensitivity 30mA, and by an excellent grounding system.

Keep in mind that a 30mA differential often intervenes, if you mount a 300mA which does not intervene, you must connect the machine without the plug.

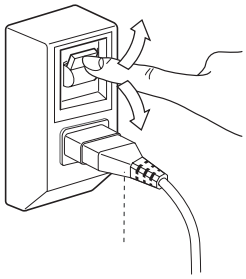

4.6.1 Water connection

Connect a water supply connection to the back of the batch freezer with a minimum pressure of **2 Bar** and a nominal capacity of at least **15 ml/min.** for THE COOLING CIRCUIT of the the condenser of the refrigeration system **(m)** and onto the connection **(n)** the outlet water drain of the circuit.

For WASHING THE MACHINE connect the **(o)** connection to a **potable** water supply fitted with a stopcock.

The connections must be made with flexible fabric-finished rubber pipes, capable of withstanding a pressure of at least **8 Bar**. The use of transparent tubes allows easy verification of the absence of fungi or algae that may form over time.

WARNING!

Make sure there are no leaks in the connections.

After using the batch freezer ALWAYS CLOSE THE WATER STOPCOCK.

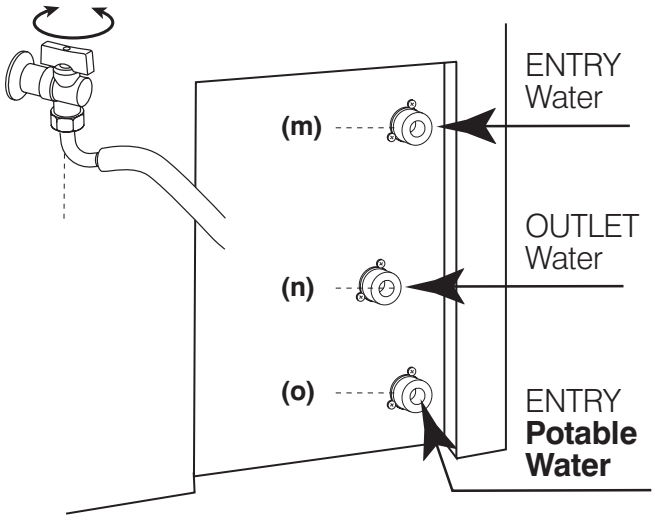

4.7 Intended use

The SCREW BATCH FREEZER MAV is indicated for:
• continuous production of ice-cream.

In general, the mc l60 BATCH FREEZER is suitable for freezing the liquid mixture, previously poured into the supply tank, where is withdrawn by an electric dosing pump and sent through a diaphragm to the emulsion area of the freezing chamber.
Here a blade, turning at high speed, emulsifies the ice-cream mixture causing an increase in volume of up to 40%.
The actual freezing takes place in the Archimedes screw that turn at low speed on the same axis as the emulsifying blade.
The ice cream produced is particularly fine-grained which enhances its characteristics.

Do not introduce mixtures containing whole pieces of fruit or hazelnuts etc. that could damage or block the Archimedes freezing screw or the emulsifying blade.

Only one operator at a time may operate the BATCH FREEZER

4.7.1 Improper use

Mixing substances that do not comply with the previous paragraph is not allowed and is equivalent to that described in the Prohibited use paragraph.
Do not use the machine without performing the routine and/or unscheduled maintenance described in the Routine maintenance paragraph at the required intervals, or after installing non-original components.

The operation of the BATCH FREEZER is not permitted by more than one operator.

4.8 Positioning

The BATCH FREEZER should be placed on a floor that must be solid, smooth and level (see Environmental conditions and Risks associated with the installation environment) using personal safety devices as described in the previous paragraph.
Make sure there is sufficient space around the BATCH FREEZER, to work, to operate the controls and access safety devices freely.
It is good practice to leave adequate space around the mixer, about 50 cm laterally and 1.5 meters at the front.
When the machine is put into the working position ALWAYS LOCK THE WHEEL BRAKES before use.

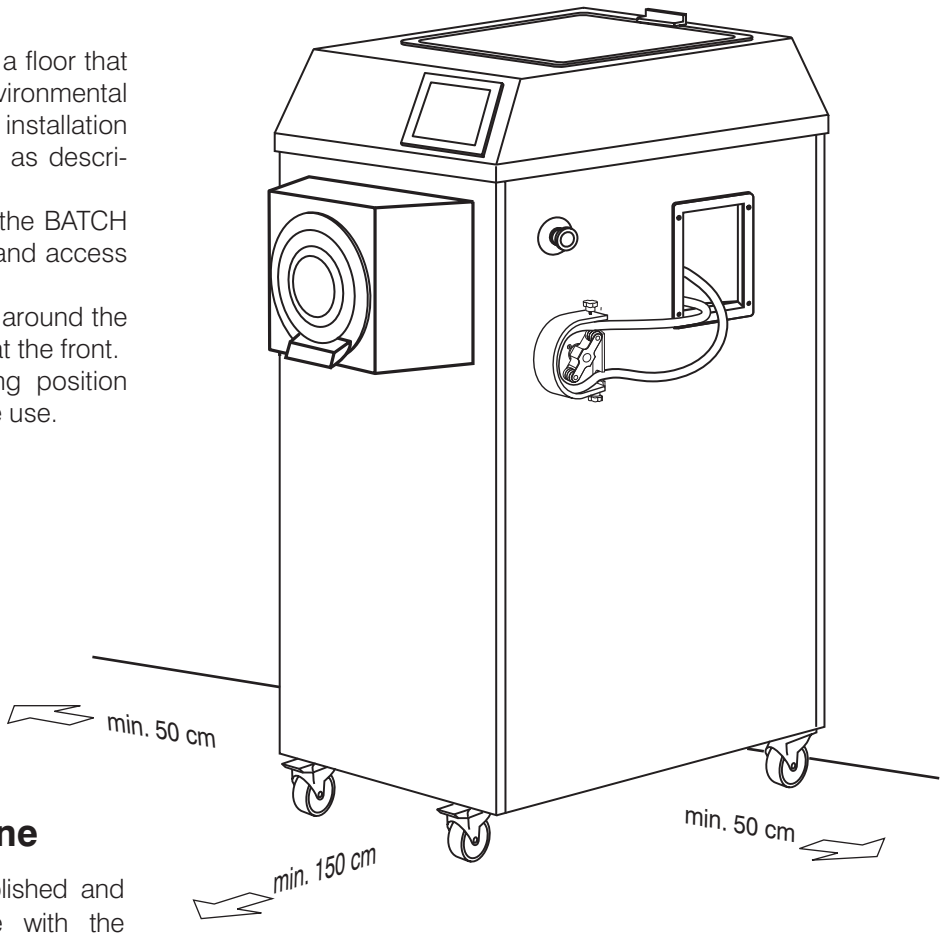

4.9 Disposing of the machine

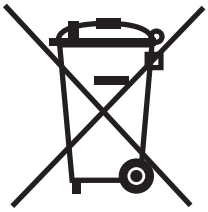

The machine must be demolished and disposed of in accordance with the regulations in force in the country of installation.
It is necessary to follow the 2011/65/EC, 2012/19/EU and 2003/108/EC directives concerning the reduction of hazardous substances in electrical and electronic equipment and waste disposal. The crossed bin symbol on the appliance or on its packing indicates that, at the end of the products life, it must be collected separately from other waste. The customer must arrange for this appliance to be collected separately once it has reached the end of its life.
The user that wants to dispose of this appliance must then contact the manufacturer and follow the system that has been adopted to allow the appliance to be collected separately at the end of its life. Adequate separate collection to allow the disused appliance to be recycled, treated and disposed of in an environmentally friendly way, contributes to preventing negative impact on the environment and health, and favours reusing/recycling the materials used in the appliance.
Illegal dumping of the product by the user entails the application of administrative sanctions provided for by the laws in force.

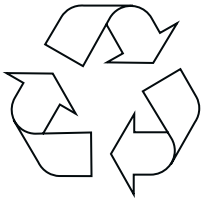

Most of the components used to package and build the BATCH FREEZER are recyclable. We recommend that the user selects them and sends them to suitable collections centres.

5.1 Description of the Batch Freezer controls

The identification of the components of the BATCH FREEZER is simple and rapid. (Fig.1)

The main control devices are:

A - EMERGENCY BUTTON
To be pressed to interrupt the work cycle ONLY IN CASE OF EMERGENCY.

B - TOUCH SCREEN CONTROL PANEL

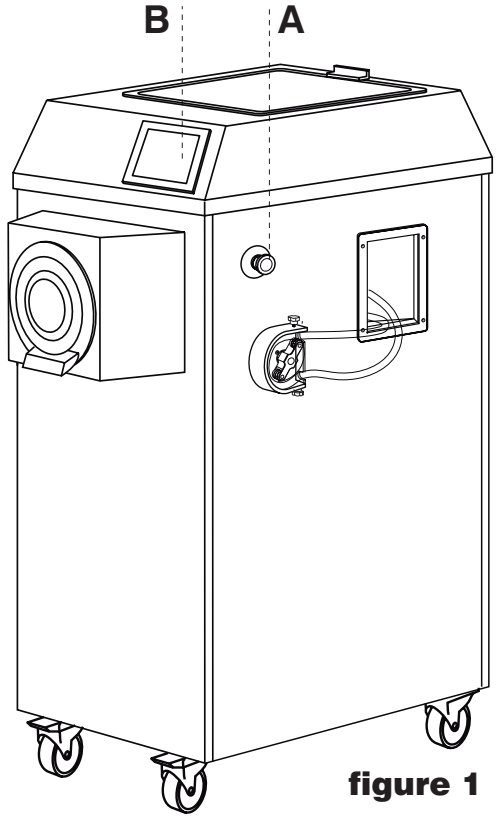

figure 1

5.2 Accessories included

The BATCH FREEZER comes complete with a box containing the following accessories:

1) **Art. A0000553**
n°1 ARCHIMEDES SCREW
2) **Art. A0000254**
n°1 WRENCH for Archimedes screw
3) **Art. A0000060**
n°1 EMULSIFYING BLADE
4) **Art. P0001060**
n°1 SEAL for mixing blade
5) **Art. A0000300**
n°1 MIXING BLADE
6) **Art. A0000264**
n°1 DOSING PUMP
7) **Art. A0000267**
n°1 RUBBER WITH ACCESSORIES
8) **Art. P0001075**
n°1 REAR DIAPHRAGM
9) **Art. A0000298**
n°1 FRONT DIAPHRAGM
10) **Art. C4000115**
n°1 ALUMINUM HANDLE
11) **Art. C4000116**
n°1 BRUSH ø 135 mm
12) **Art. C4000114**
n°1 BRUSH ø 15 mm
13) **Art. P0001076**
n°1 DIAPHRAGM PLUG

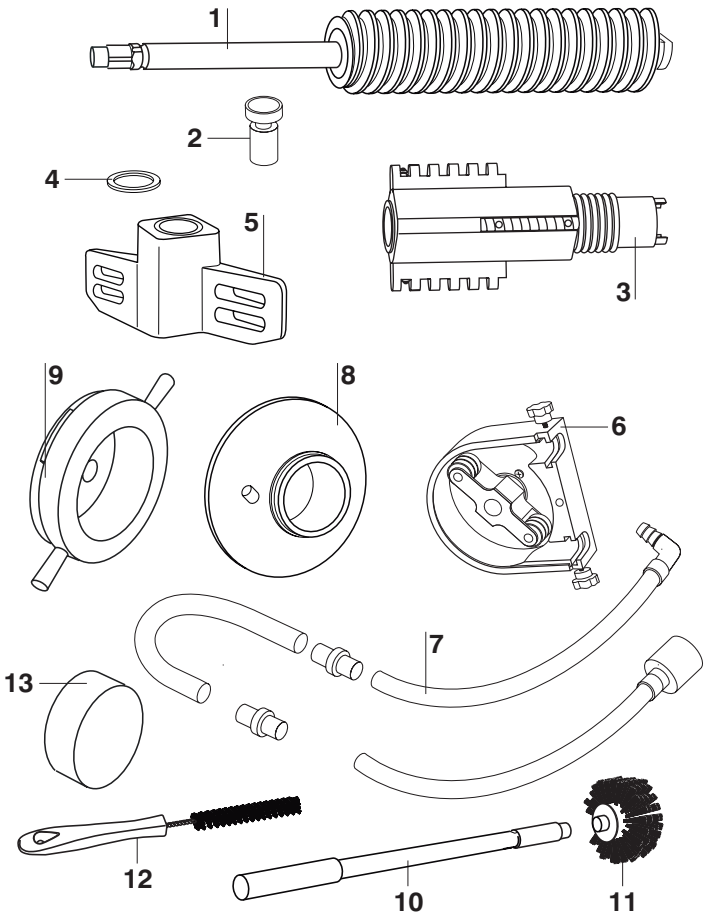

5.3 Assembling and preparatory operations

⚠ Before proceeding with the assembly make sure you have properly cleaned and sanitised all the components and gaskets of the BATCH FREEZER.

5.3.1 Assembly of the mixing blade

Lift the lid of the tank for the mixture on top of the batch freezer and fit the gasket **(A)** provided, onto the pin of the driving shaft placed in the tank itself (Figure 2).

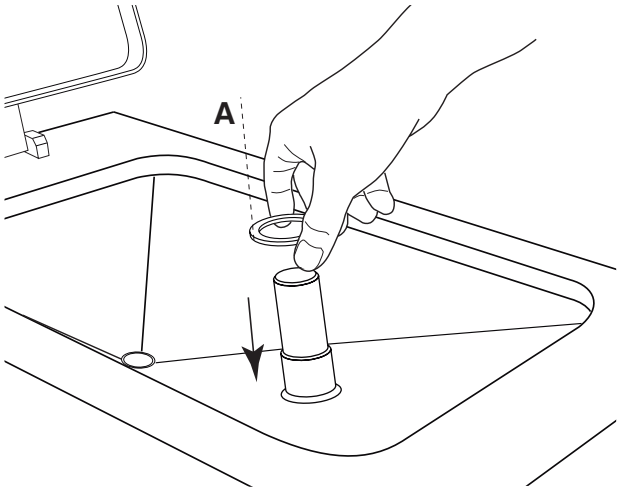

figure 2

Then insert the mixing blade **(B)** provided, onto the pin of the driving shaft with the visible part in steel facing up (figure 3).

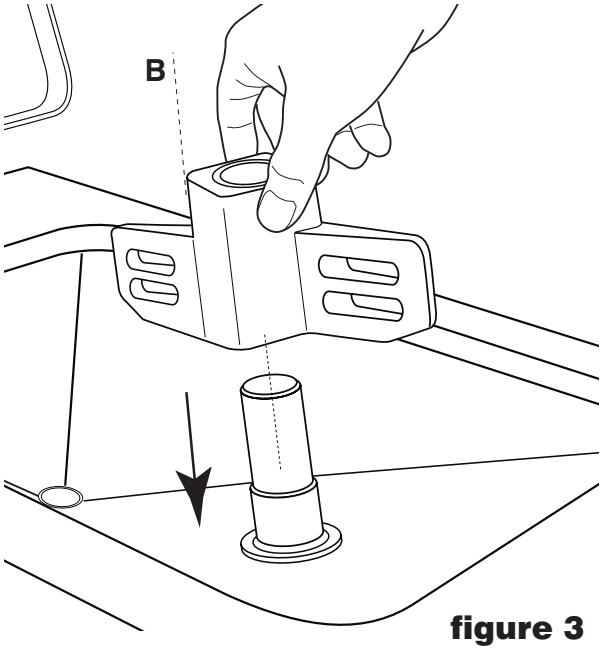

figure 3

Mixing blade inserted correctly (figure 4).

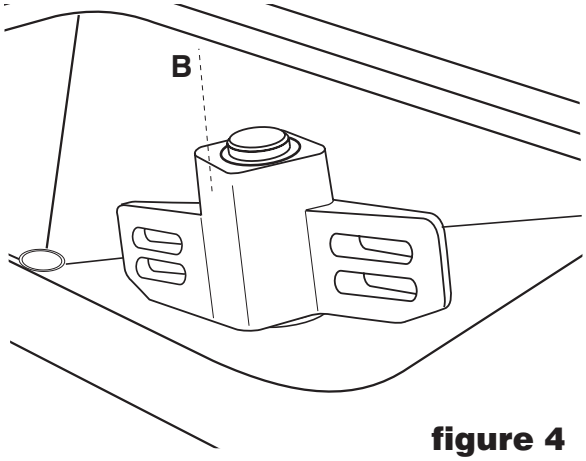

figure 4

5.3.2 Assembly of the dosing pump

The BATCH FREEZER has two double use sides therefore the dosing pump and the features depicted may be installed and operated on either the left or the right side of the BATCH FREEZER according to the space available in the room where it is installed.

Insert the dosing pump **(C)** in its appropriate seat (figure 5).

The correct insertion of the dosing pump is obtained by matching the driving pin with the seat of the pump pin holding it at an angle as shown (figure 5).

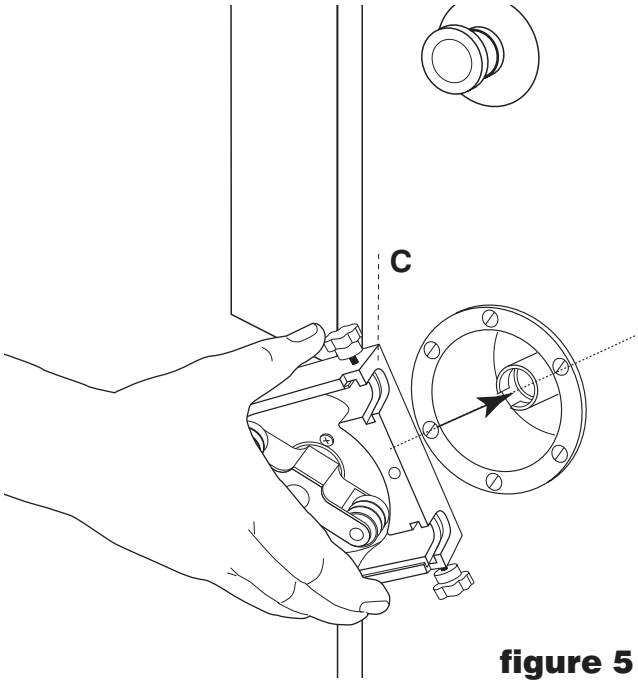

figure 5

When the dosing pump **(C)** is inserted in the appropriate seat turn it in the clockwise direction until it is nearly in a horizontal position (figure 6). Eventually helping yourself with both hands.

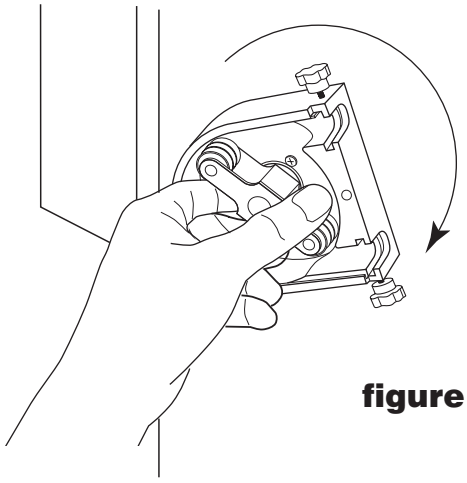

figure 6

The correct position of the dosing pump **(C)** installed (figure 7).

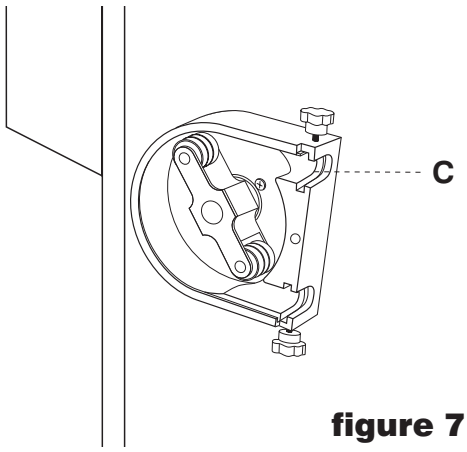

figure 7

5.3.3 Assembly of the seal

Assemble all the components of the pump supplied after they have been cleaned and sanitised.

The rubber is properly calibrated and fitted with joints **(x)** which facilitate positioning and fixing.
These must be inserted in the supplied rubber pieces, the terminal with a 90° connection must come out on the TOP part of the pump, while the one with filling cap must exit on the BOTTOM of the pump (figure 8).

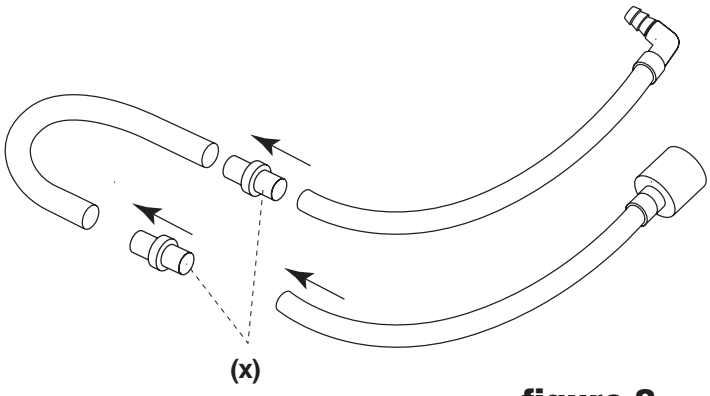

figure 8

Insert the rubber into the pump taking care to insert the two joints **(x)** into the corresponding grooves of the pump (figure 9).

Screw (without over tightening) the knobs (y) to lock the joints in the pump (figure 9).

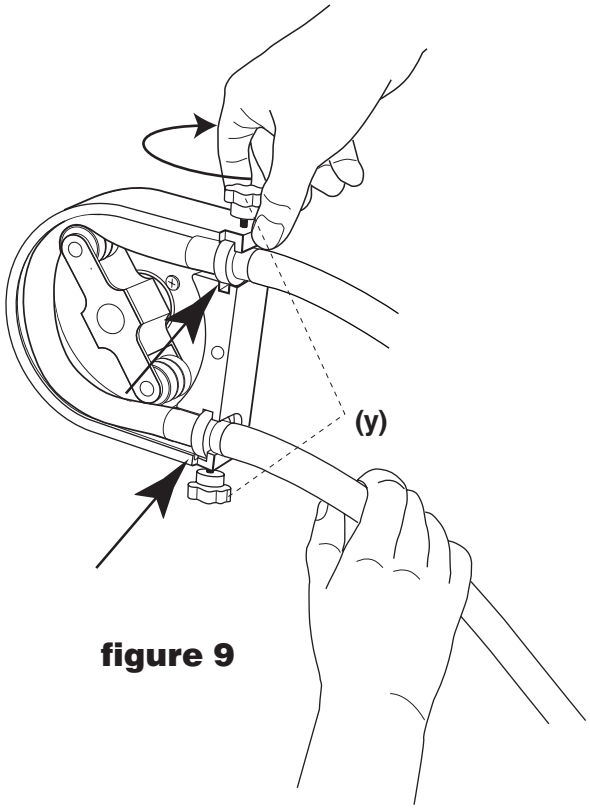

figure 9

Insert the Plexiglass cover of the pump and secure it with the knob (figure 10).

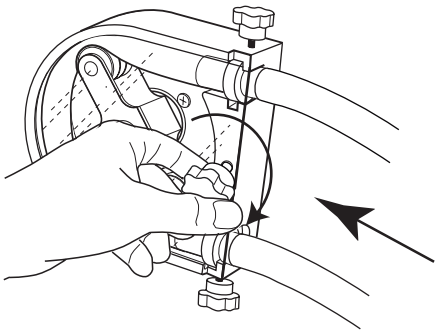

figure 10

5.3.4 Assembly of the rear diaphragm

Insert the diaphragm supplied into the passage hole, making sure that the hole **(z)** of the diaphragm is facing the entrance of the hole (figure 11).

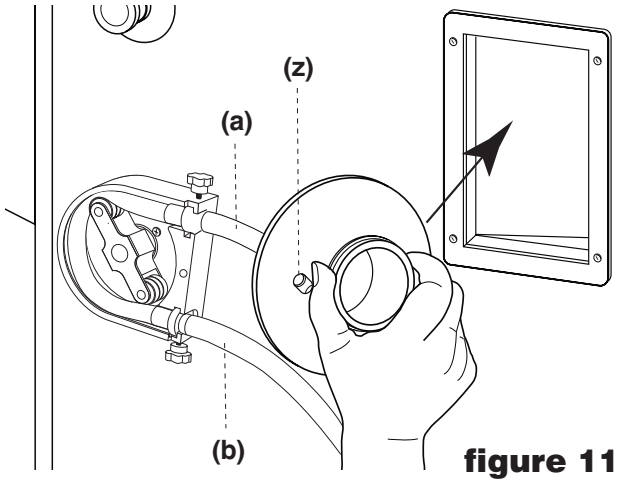

figure 11

Centre the diaphragm into the seat of the evaporator.
Then rotate the diaphragm clockwise until it reaches the mechanical end stop (figure 12).

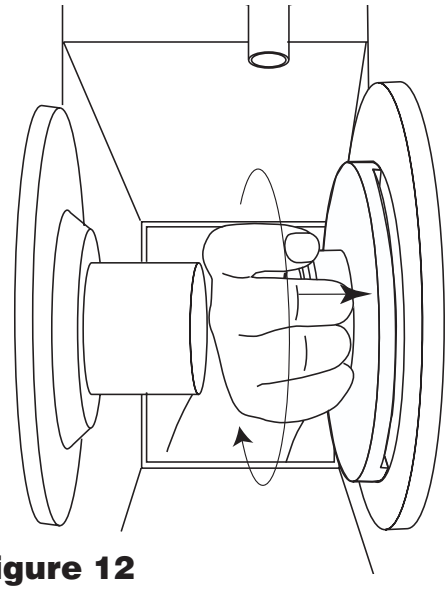
figure 12

Insert into the hole and connect the rubber hose terminals **(a)** and **(b)** of the dosing pump as shown.

The rubber tube **(b)** equipped with filling cap which is located in the lower part of the dosing pump must be connected to the connection of the outlet pipe of the top tank (figure 13).
The rubber tube **(a)** equipped with 90° connection that is located in the upper part of the dosing pump must be connected to the hole **(z)** of the diaphragm (figure 14).

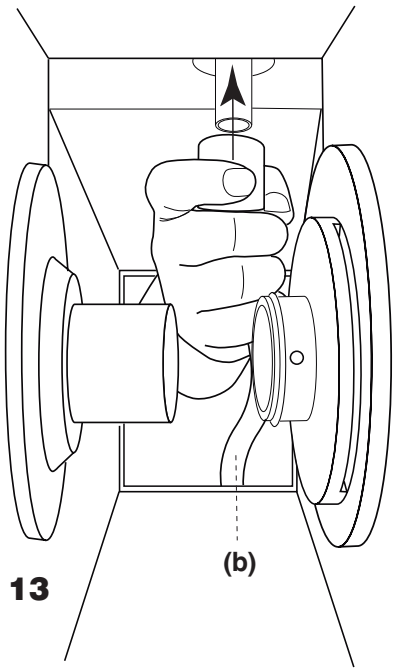

figure 13

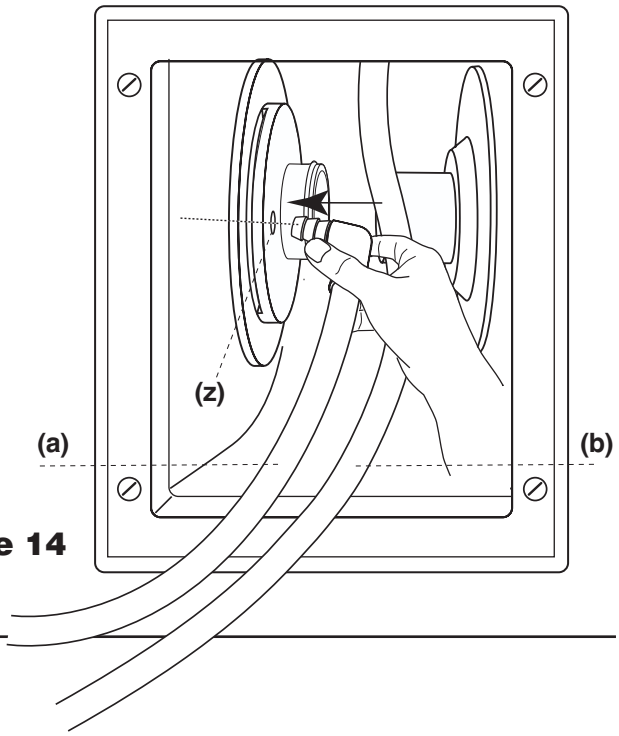

figure 14

5.3.5 Assembly of the scroll and emulsifying blade

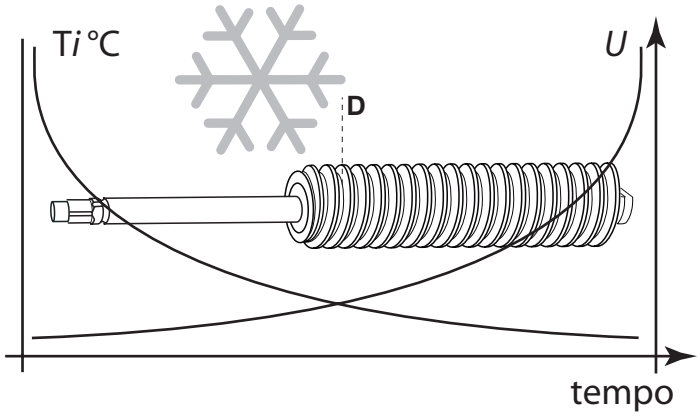

⚠ Before assembling or before starting production, place the Archimedes screw **(D)** sanitised and dry in the refrigerator to bring it to the right temperature. The cooling time of the Archimedes screw is conditioned by the initial temperature and wear of the same.

For the assembly of the Archimedes screw and the blade, carefully follow the steps below.
The dismantalability of the blade and Archimedes screw groups ensures easy and quick sanitisation of the components to guarantee perfect hygiene.

THE EMULSIFIYING BLADE **(E)** is composed of a the main body **(b1)**, 4 emulsifiers **(b2)** and 8 pins with rings **(b3)** that guarantee a tight seal.

⚠ IF THE PINS ARE WORN **(b3)** THEY MUST BE REPLACED!

Insert and connect the 4 emulsifiers in the right direction on the appropriate pins **(b3)** (figure 15).

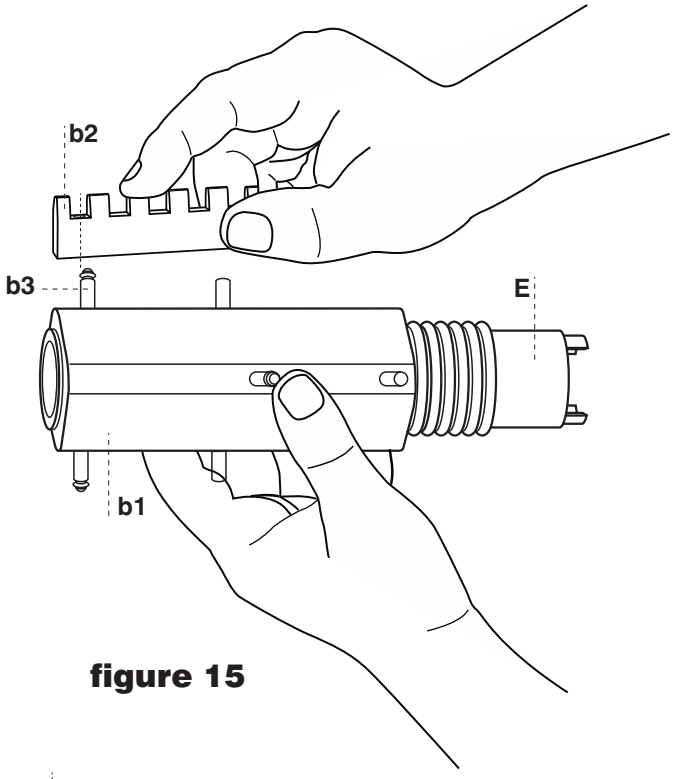

figure 15

Once inserted the 4 emulsifiers, be CAREFUL that their shape is flush with the body of the blade and do not stick out otherwise it means they are not installed in the correct way (figure 16).

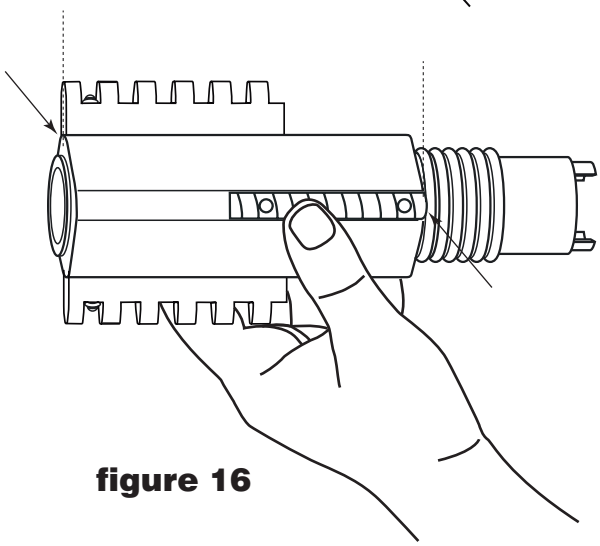

figure 16

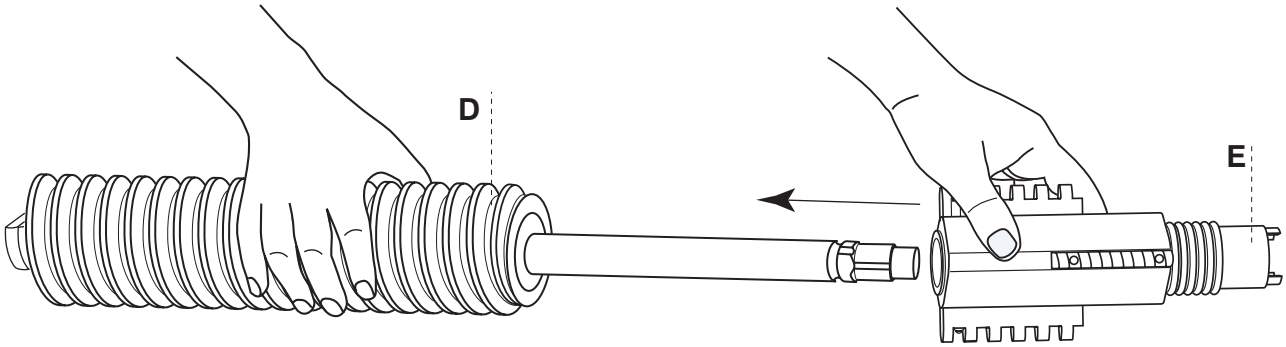

Insert the emulsifying blade **(E)** on the Archimedes screw shaft **(D)** in the direction shown in figure 17, until it rests on the Archimedes screw.

figure 17

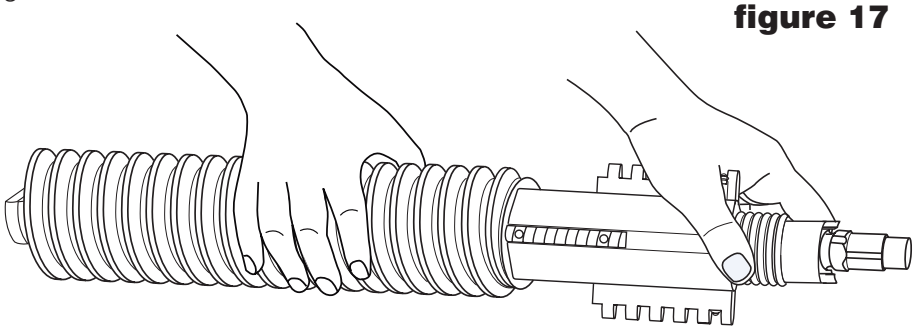

Insert the extraction key **(d)** on the pin of the body shaft **(D)**.
Raise the body of the key and attach the appropriate seat onto the pin of the Archimedes screw shaft (figure 18) and release the body.

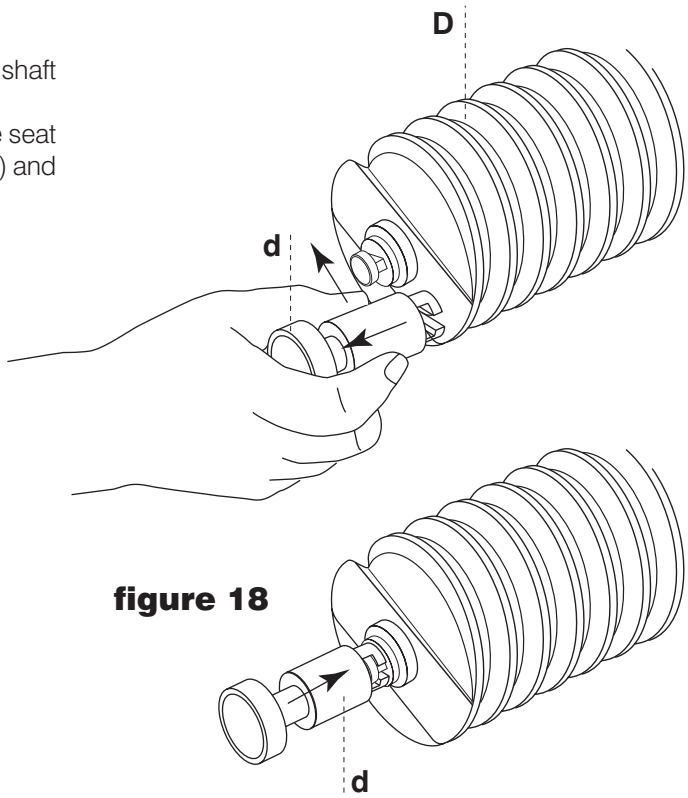

figure 18

SLOWLY insert the Archimedes screw assembled with the emulsifying blade into the evaporator (figure 19).

N.B. In the event of excessive friction when inserting the Archimedes screw into the evaporator, DO NOT FORCE BUT FURTHER COOL THE ARCHIMEDES SCREW.

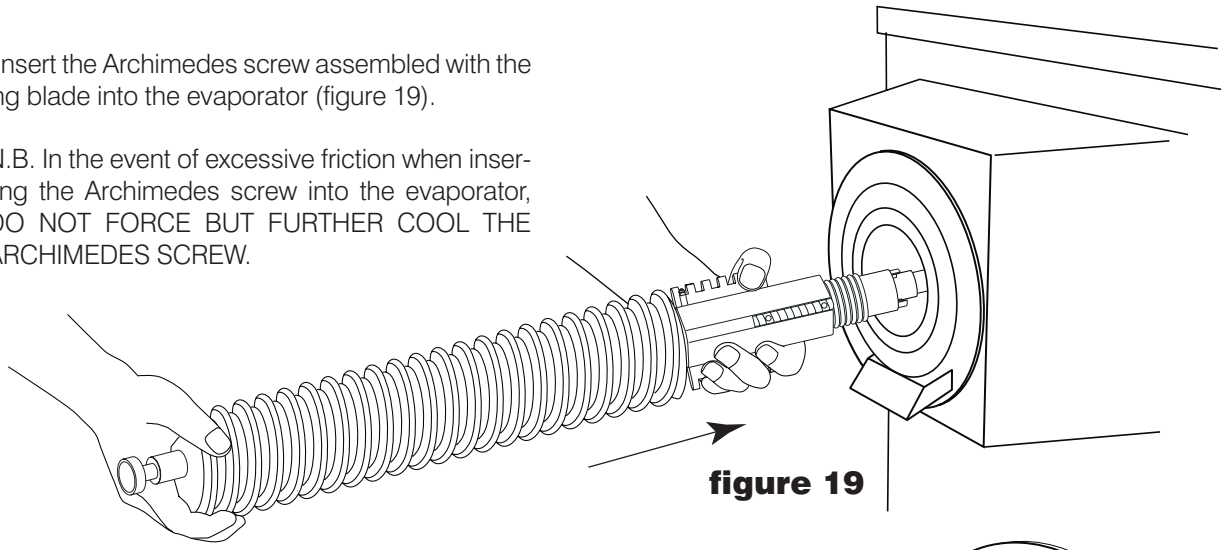

figure 19

For the full insertion of the Archimedes screw it may be necessary to turn the key in both parts to allow the interlocking of the shaft with the rear rear diaphragm holes (figure 20).
Accompany the insertion of appropriate seat of the pin of the Archimedes screw through the side passage hole (figure 20a)

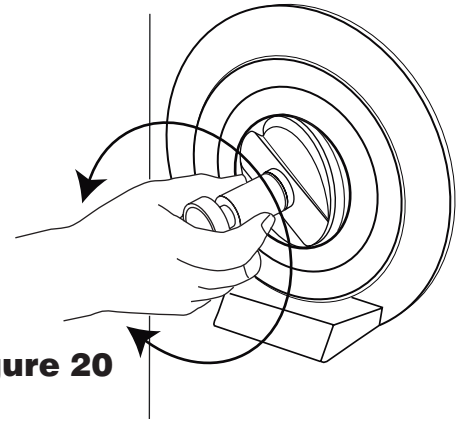

figure 20

When the Archimedes screw is fully inserted in its seat, remove the key **(d)** disengaging it from the pin of the Archimedes screw shaft (figure 21).

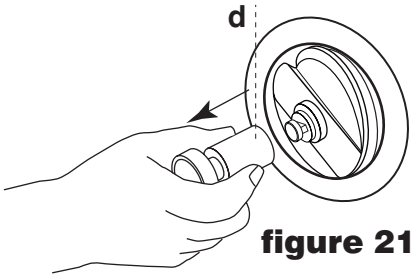

figure 21

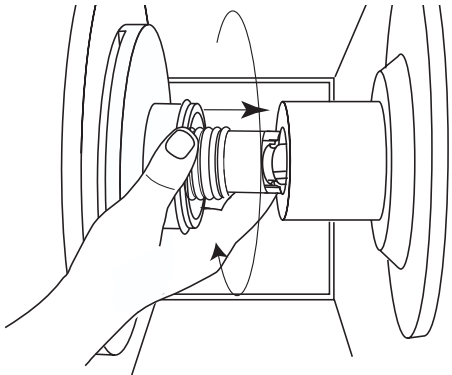

figure 20a

Insert the front diaphragm **(F)** into the appropriate front coupling point and turn it clockwise until it stops (fig. 22).

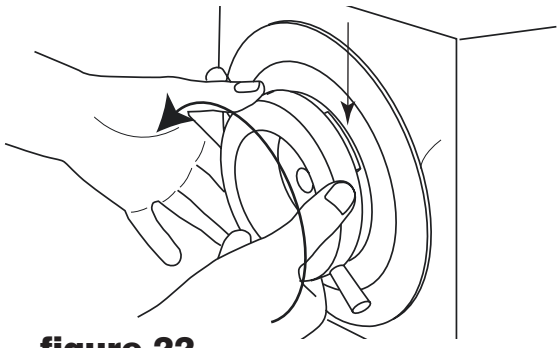

figure 22

5.4 Description of the display

The identification of the controls on the display the BATCH FREEZER is quick and easy:

1) "Recipes" by pressing the button you have access to the listof recipes stored (Para. 5.4.1)

2) "Alarms" allows you view the active alarms and if necessary reset them (Para. 5.4.2)

3) "Utility" provides details on the particular operating utilities (Para. 5.4.4)

4) "Password" by pressing it you can log in to access your machine operating parameters (Para. 5.4.4)

5) "Settings" swhen pressed it allows access tosettings (Para. 5.4.5)

6) "AUT START" button to start the machine in the automatic mode (Para. 5.5.1)

7) "MAN START" button to start the machine in the manual mode (Para. 5.5.2)

8) "Emergency Reset" button to reset the machines emergency settings

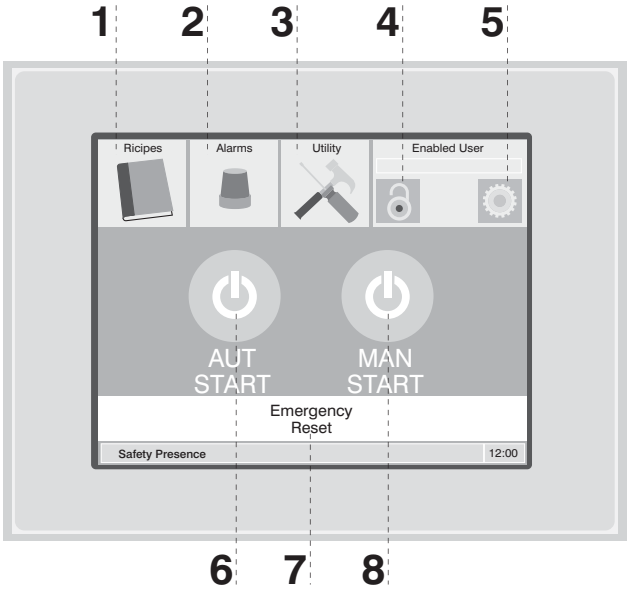

5.4.1 Recipes

Pressing the "Recipes" button you can accessthe stored recipes screen (figure 23).
After you have pressed the button

Modify Recipes

on the left, the fields that allow you to change the speed of the pump and of the Archimedes screw are activated.
Select the recipe to be changed (if not already selected)
Change the desired parameters.
Press the button "save".
If you want to change the recipe name press save as.
Subsequently, if you want to load the recipe you have just changed press the button

Load and exit

(figure 24)

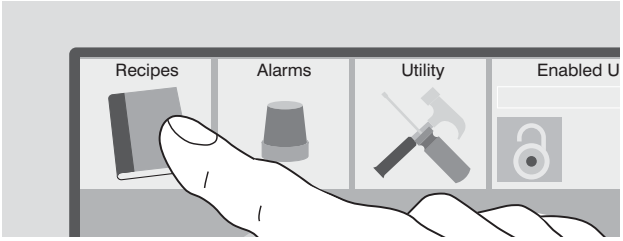

figure 23

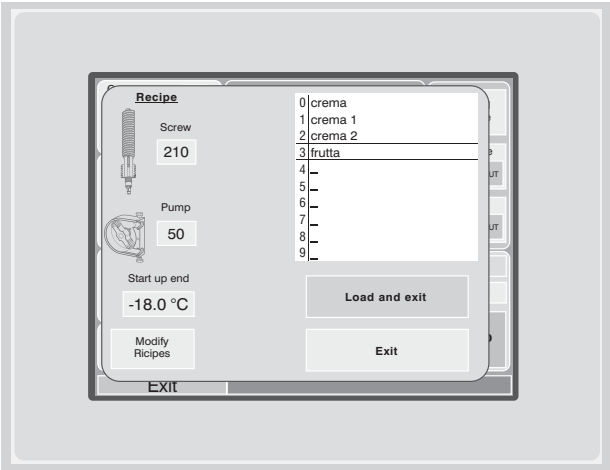

figure 24

5.4.2 Alarms

By pressing the "Alarm" button
the active alarms and alarm history is displayed.
(Figure 25).

Pushing buttons
you view the list up or down of both the
active alarms and the alarm history

For more information about alarms that are no longer active press

Alarm History

To reset all resettable alarms press the button

Reset Alarms

If the alarm persists it may still be present. See alarm diagnostics (Para. 6.2).

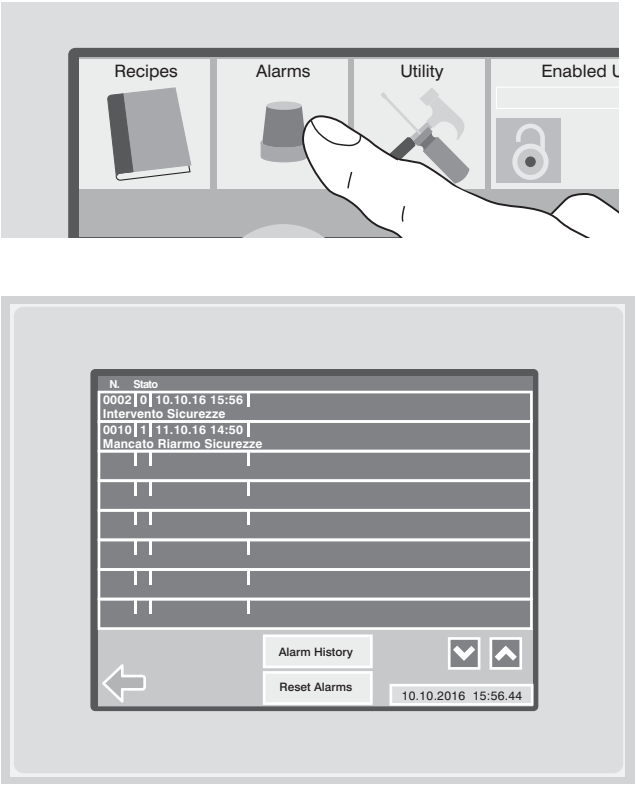

figure 25

5.4.3 Utility

Pressing the "Utility" button you can access to screen of (Figure 26).

This function serves to unlock the screw that if not kept at the proper temperature expands and locks inside the cylinder.

Press the buttons according to needs

Light

or

Heavy

The machine indicates the status of the unlock process.
If it is unsuccessful, it is reported. (Fig. 27)

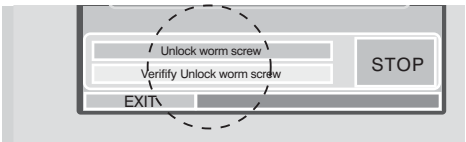

figure 27

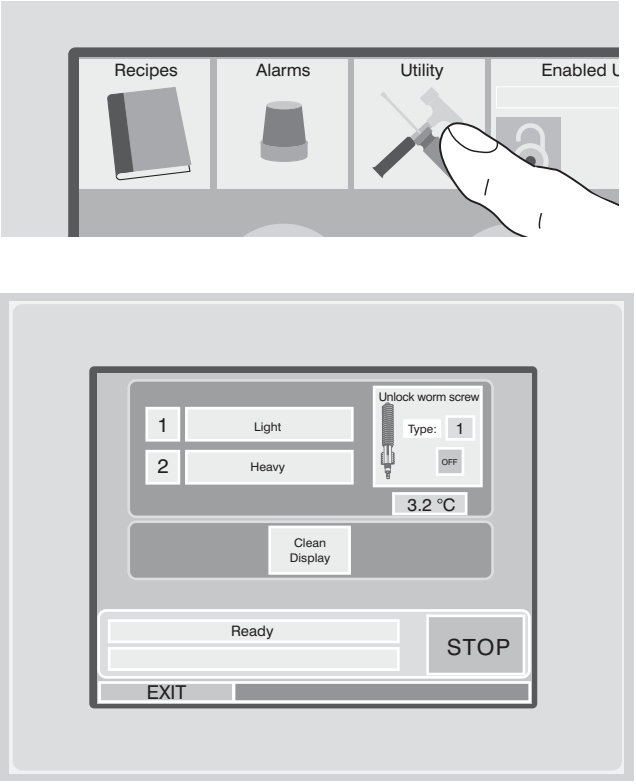

figure 26

5.4.4 Password

Pressing the button  to screen of (Figure 28).

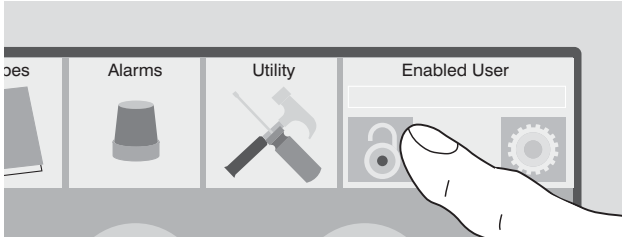

This function is used to enable and protect access to the machine settings through passwords of different users.

User	1234
Service	1102

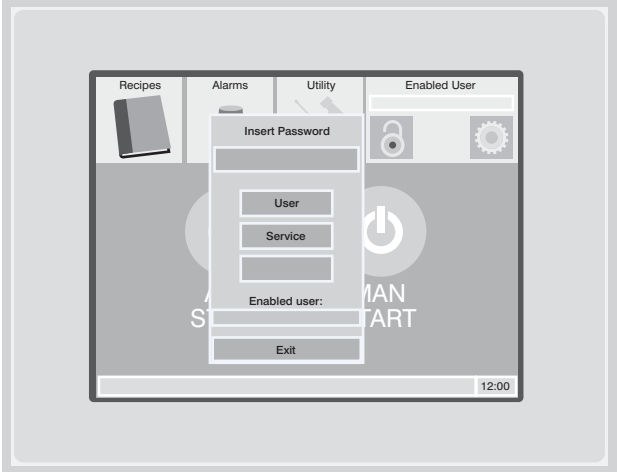

figure 28

To access press in the password area and type it in using the keypad (Fig. 29) and confirm with the "RET" button

Then select the desired user.

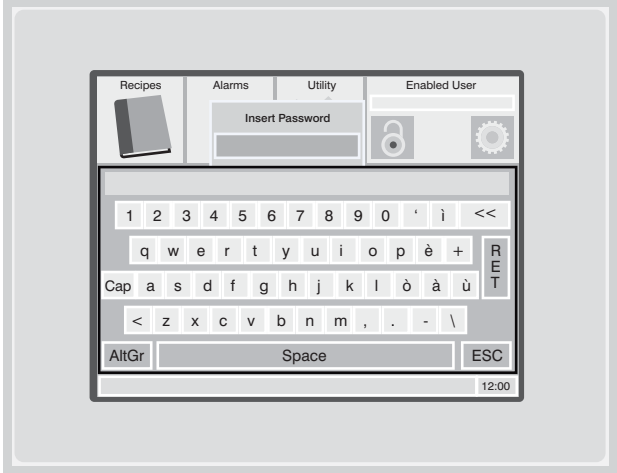

figure 29

The words "authorised user" indicates the name of the user enabled in that moment.

It is necessary to log out voluntarily.
If there is an enabled user and the machine is stopped for a certain period the log out is automatically performed (Fig. 29a)

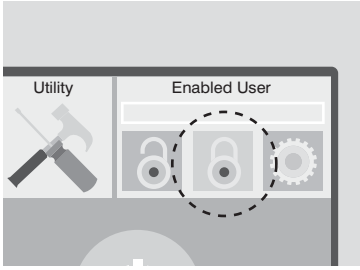

figure 29a

5.4.5 Settings

Pressing the button
you access the settings of the machine such as:

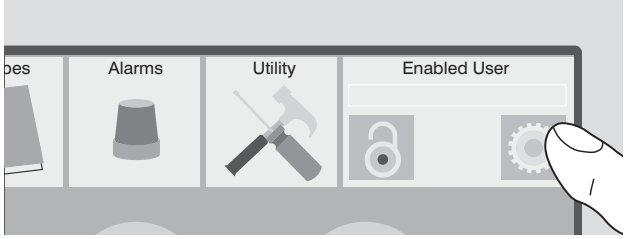

- Choice of langage (Figure 30)

Press the button for the desired language

Continue browsing through the buttons

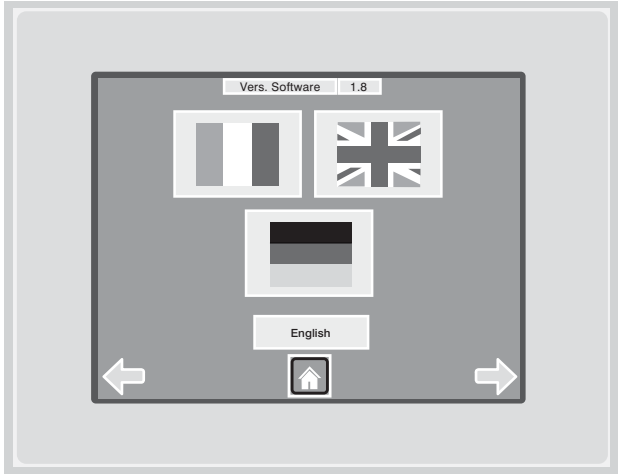

figure 30

- Date and time setting (Figure 31)

Set the date and time with the buttons

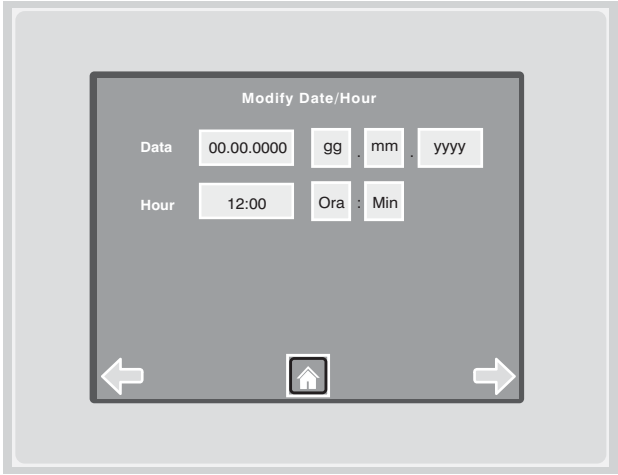

figure 31

- Screen to set or change: (Figure 32)

Schermata per impostare o modificare:
- the safety defrost temperature
- the temperature level to be maintained
- the differential temperature to be maintained
- the speed of the blade
- selection of the type of pump

The pump to be used must be set for a correct automatic start.

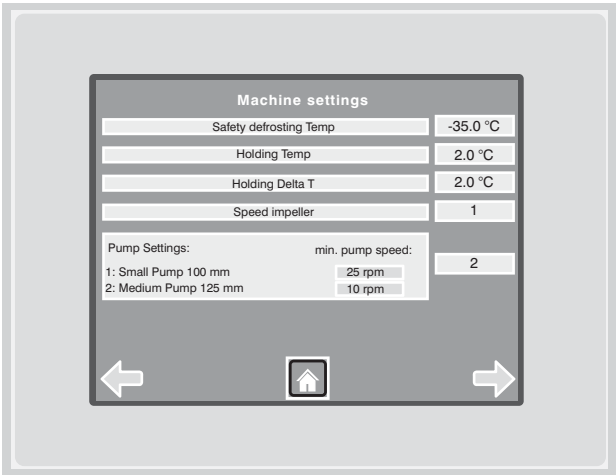

figure 32

5.5 Operating cycles

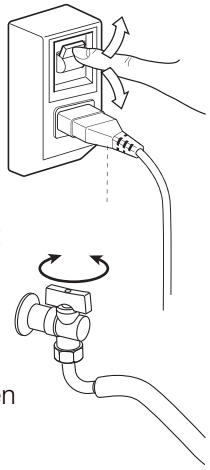

After the preliminary control operations
to check that the water supply is turned on and that
the power plug is connected to the electrical panel,
switch on the main switch.

When switched on, after completing
the loading process of the software the touch screen
will present the screen of Figure 33.
The "AUT START" for the automatic cycle
The "MAN START" for the manual cycle

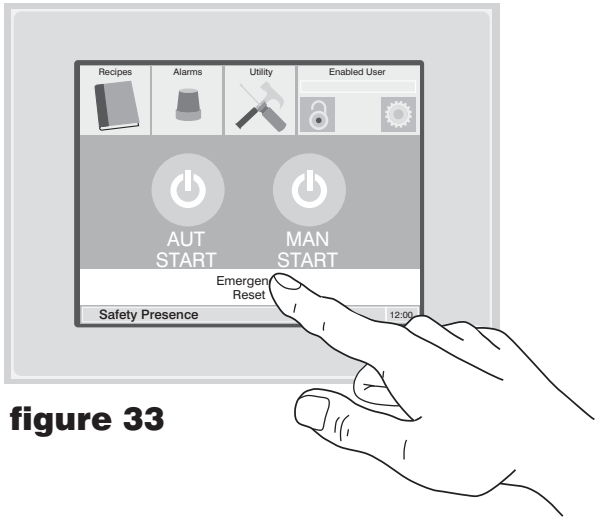

figure 33

Press the “Emergency Reset” button
to reset the emergency circuits of the machine and
enable it to operate.
If the emergency circuits of the machine are enabled the
button disappears.

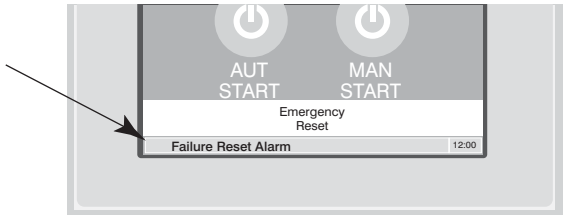

figure 34

If the safety circuits of the machine do not reset
the following message appears
“Failure Reset Alarm” (Figura 34).

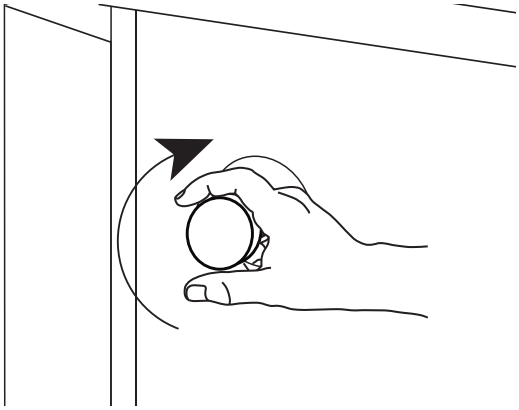

figure 35

Check the EMERGENCY button and eventually
reset it by turning it clockwise (Figure 35).

Then press “Emergency Reset” o continue.
(Figure 33).

Lift the lid of the tank and pour
the product to be batched (Figure 36).

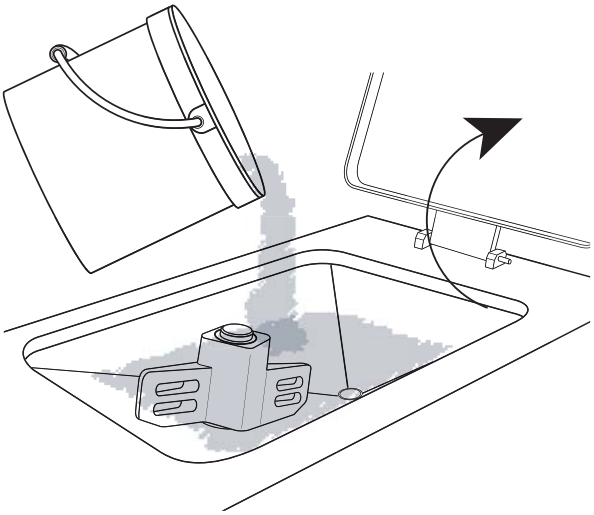

figure 36

5.5.1 Automatic start-up

When switched on, the touch screen of the BATCH FREEZER will present the screen at the side.
To start the BATCH FREEZER in the automatic mode press the "START AUT" button (Figure 37)

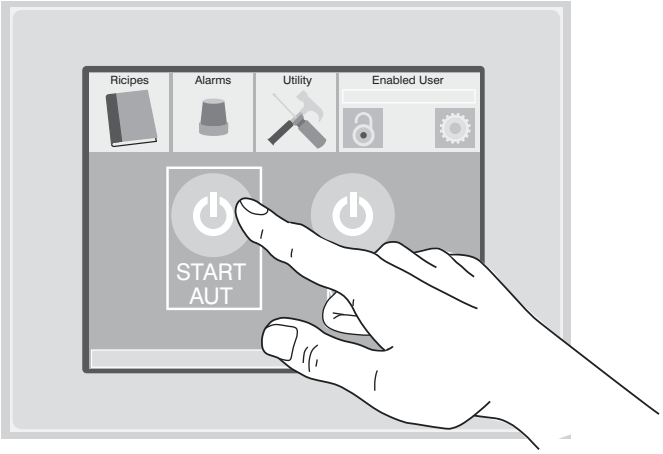

figure 37

Check the type of pump set!

The pump to be used must be set for a correct automatic start (see para. 5.4.5).

Access the list of saved recipes by pressing the "Recipe" button (Figure 38)

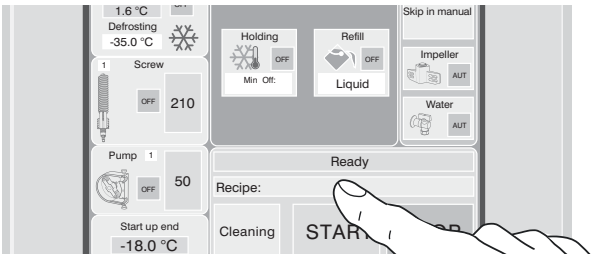

figure 38

Select the "Recipe" that you want to batch (Fig. 39) and confirm the choice by pressing the button:

Load and exit

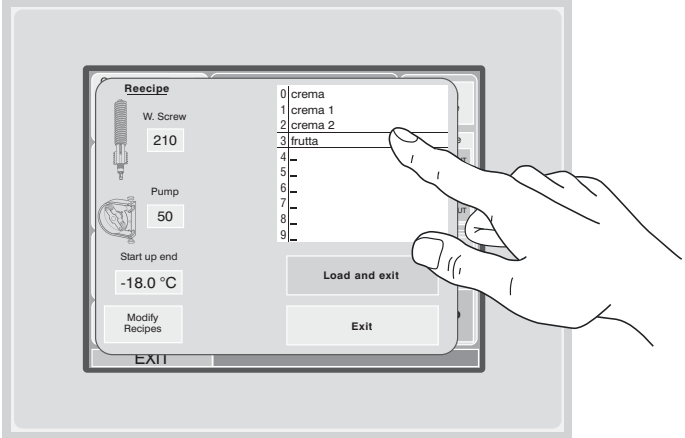

figure 39

The screen of (Fig. 40) appears which highlights the active recipe. If the active recipe is not correct, by pressing the name of the recipe it will be possible to activate a different one (see figure of the recipes).
Then start the processing by pressing the "Clean Start" button.

If you have chosen the wrong recipe, press "STOP" and repeat the correct operation.

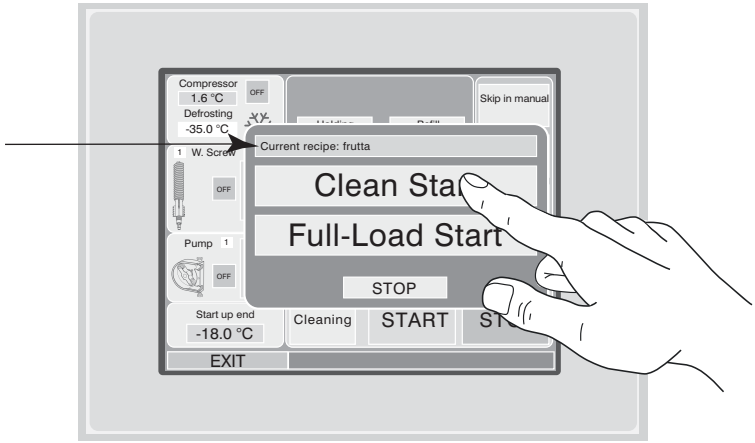

figure 40

At the start of the cycle, the touch-screen shows the status of the functions, temperature and speed of the machine active for the chosen recipe (Figure 41).

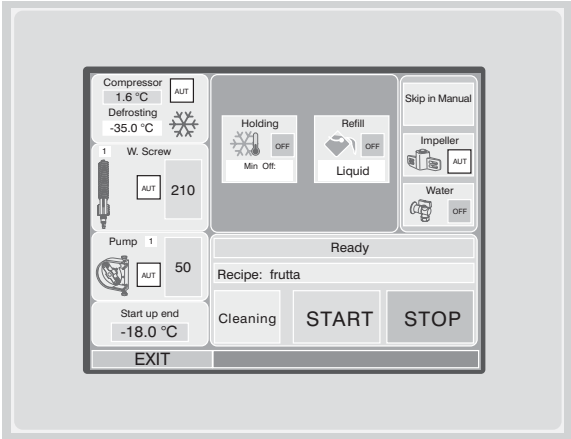

figure 41

For special requirements of the product, you can also activate the button "Skip in manual" (Figure 42).
(In this case for settings and operation see paragraph 5.5.2 Manual start-up)

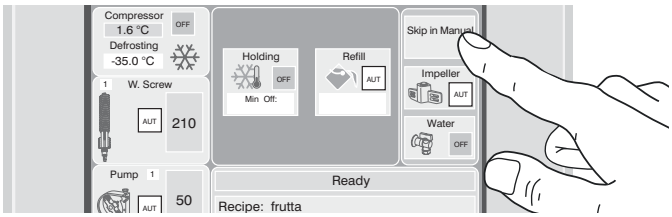

figure 42

In case of lack of liquid in the tank, it allows you to top up the liquid within 30 seconds after pressing the "Refill" button.
Once you have topped up the tank press the "Refill" button again to automatically restart the machine without discontinuity in freezing.

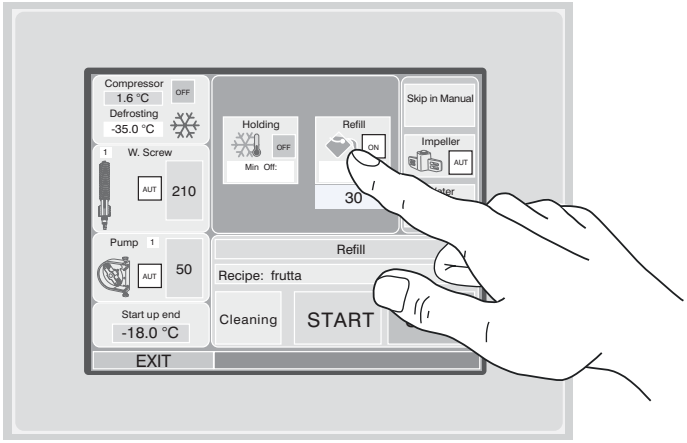

figure 43

If 30 secs. have passed the machine restarts but there may be discontinuities in the quality of the freezing.

When you give the command of the end of topping up with the button, the machine will restart automatically. (Figure 44).

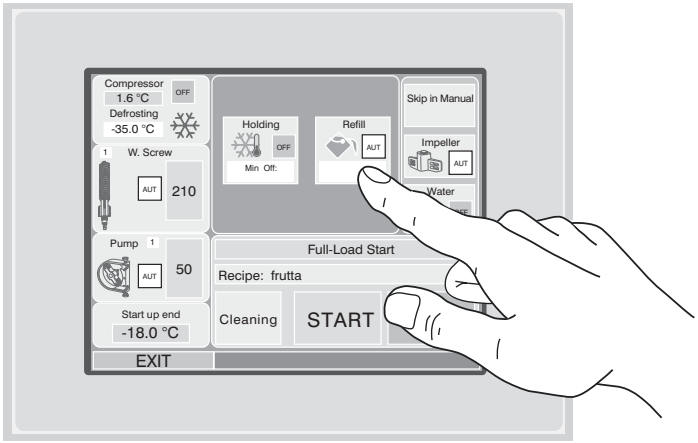

figure 44

Pressing the "Holding" button (Fig. 45) the tunnel is maintained at a temperature between 0° C and 4° C (factory setting) for a maximum time of 60 minutes within which you can resume work.

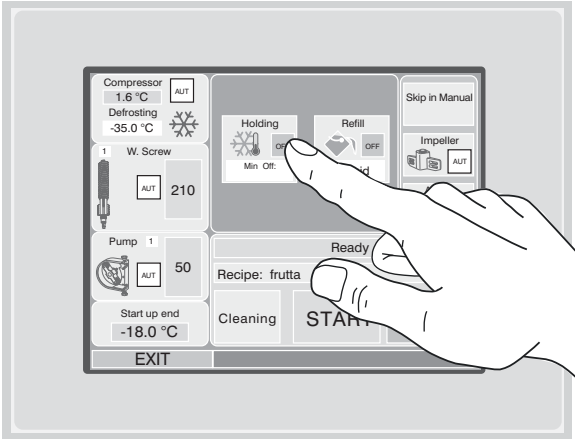

figure 45

To stop the "Holding" function press the "STOP" button and then "Full-Load Start" (Figure 46).

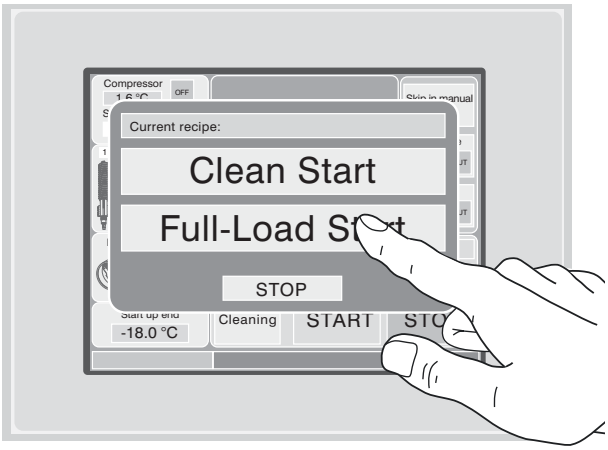

figure 46

Or if the cycle has concluded, press the "Cleaning" button (Figure 47).
To clean the machine (see Chapter "Washing the machine at the end of production")

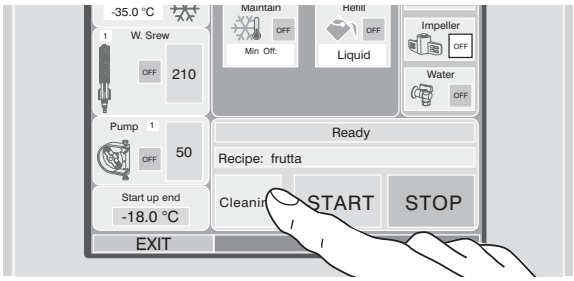

figure 47

5.5.2 Manual start-up

When switched on, the touch screen of the BATCH FREEZER will present the screen at the side.
To start the BATCH FREEZER in the MANUAL mode, press the "START MAN" button (Figure 48)

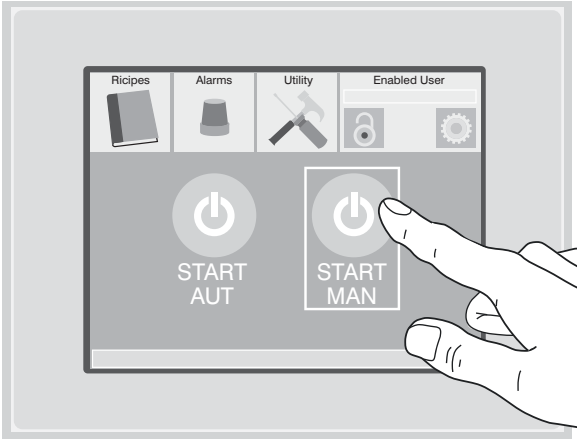

figure 48

The screen of Figure 49 appears. Activate the "Impeller" button and "Water"

Depending on the product that you have to mix set the speed of the screw **<200 revolutions/minute**, the pump speed **25-30 revolutions/minute** by pressing the buttons indicated.

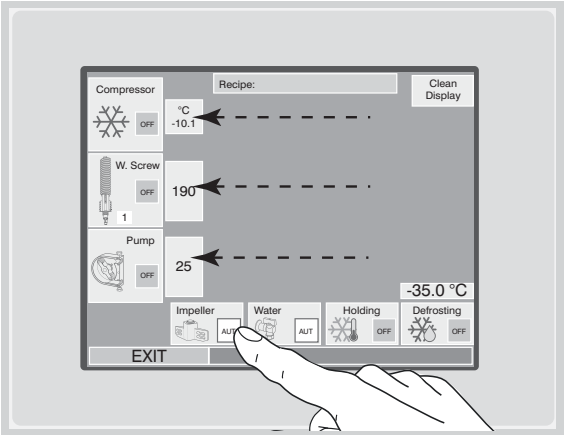

figure 49

The speed can be adjusted in steps of 1 revolution/minute at a time by pressing the + or - or by dragging the square button to the sign + or - for faster scrolling (Figure 50)

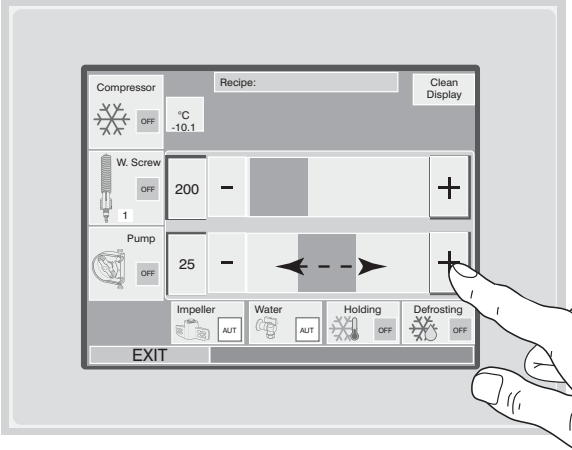

figure 50

Start the cycle by pressing the buttons in order:
1 - the compressor
2 - the screw
3 - the pump

(Figure 51).

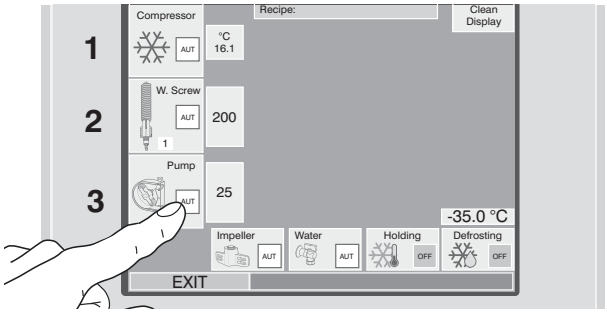

figure 51

Wait for the flow of the product from the diaphragm of the Batch freezer and check the structure.
Adjust the pump speed and the screw using the buttons + or - according to the structure of ice cream and according to your own needs (Figure 52).

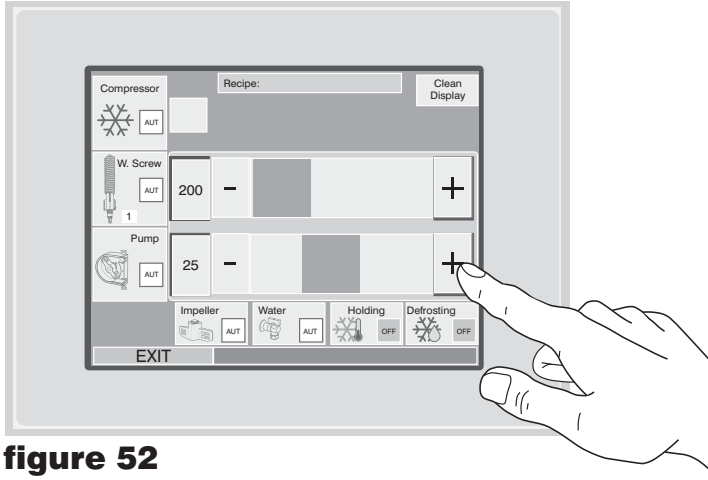

figure 52

When you have finished loading the product into the tank, to continue freezing more press "Holding" set for a max time of **60 mins**. (Figure 53).

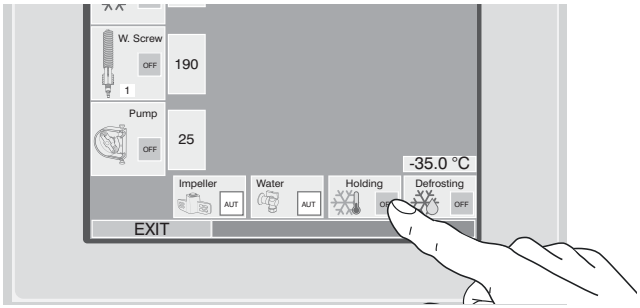

figure 53

Pour the product into the tank and press the button "Holding" to disable it.
Reactivate the cycle by pressing the buttons in order:
1 - the pump
2 - the screw
3 - the compressor

(Figure 54)

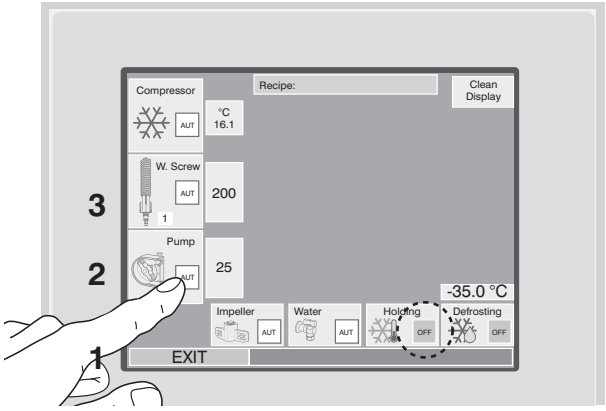

figure 54

If for any reason the machine during a cycle should remain still for an extended period of time, or to end the cycle press the "Defrosting" button (Figure 55)
To clean the machine (see Chapter "Washing the machine at the end of production")

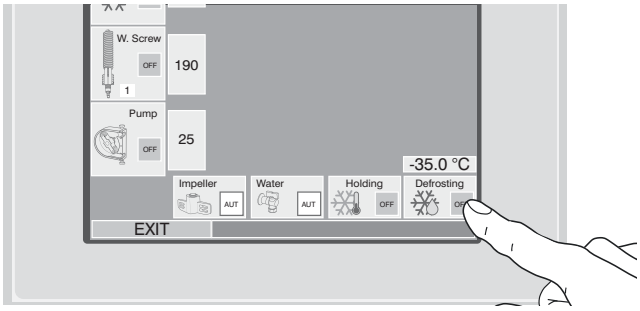

figure 55

The displayed temperature -35.0° C indicates the temperature of the safety defrost.
It is the minimum temperature at which the tunnel can work.
After that automatic defrosting starts that is stopped when the temperature rises by 3° C (factory setting).

If you want to modify it for your needs, press and hold the temperature button highlighted (Figure 56).

This function is also valid for automatic operation.

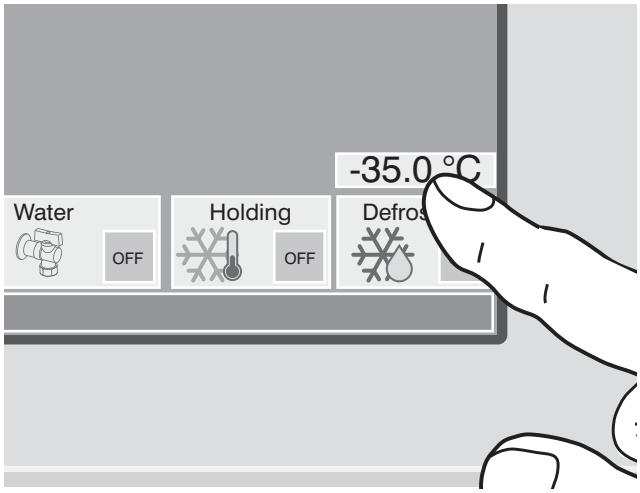

figure 56

With the keypad set the desired temperature (min -18.0 and max -35.0) and confirm pressing the "RET" button (Figure 57).

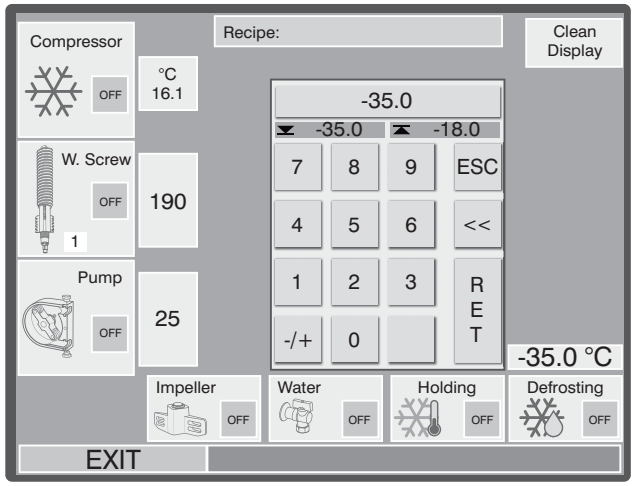

figure 57

6.1 Washing the machine at the end of production

After finishing the production wait for the release of all the residue ice cream in the screw from the front diaphragm (about 10-15 seconds).
Replace the container and press the "Cleaning" button on the display (Figure 58).

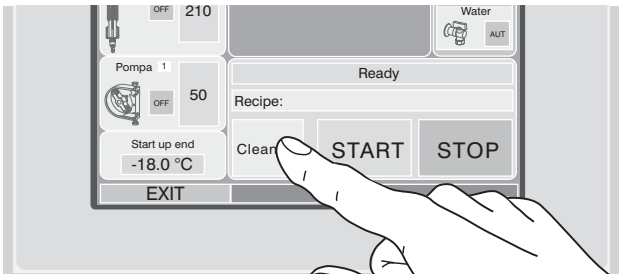

figure 58

Press the "Defrost and empyting worm Screw" which takes about 2 mins. (Figure 59).
After the automatic stop of the machine remove the screw.

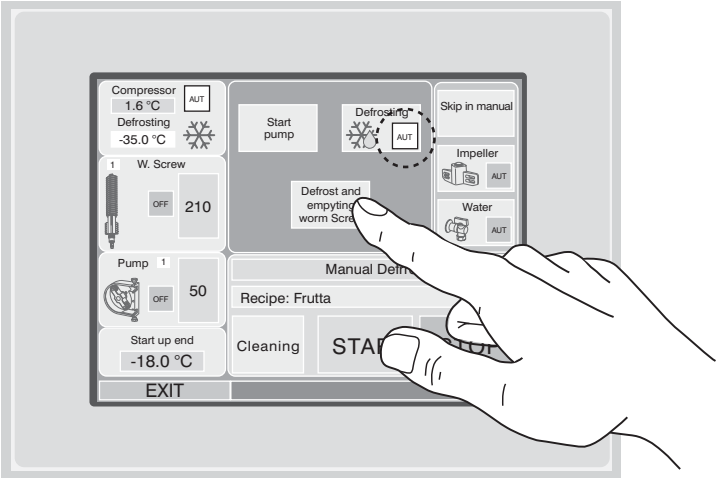

figure 59

Once the defrosting and emptying of the screw is finished the functions will stop automatically.
If you want to stop them before that time press the "STOP" button (Figure 60).

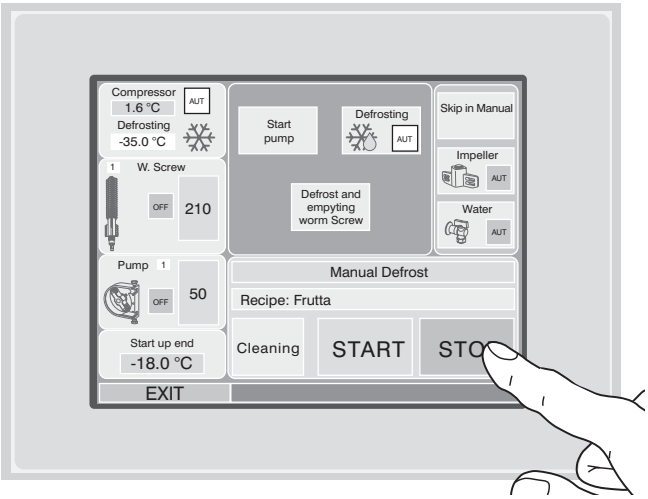

figure 60

Remove the front diaphragm by turning it clockwise until you disengage it from its connector and remove (fig. 61).

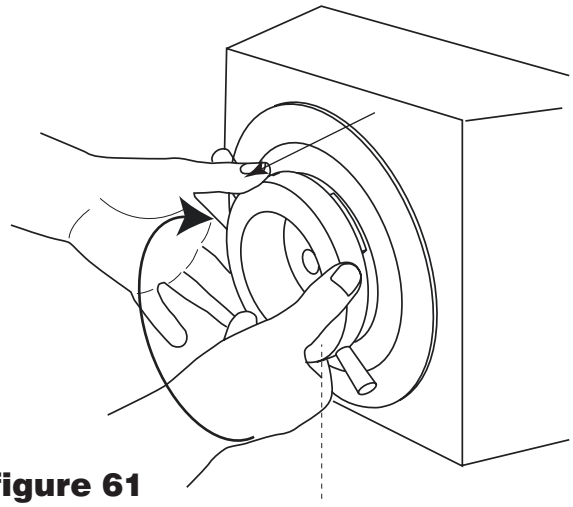

figure 61

Insert the manipulating spanner onto the shaft of the Archimedes screw and disengage it with rotary movements from the rear (Figure 62).

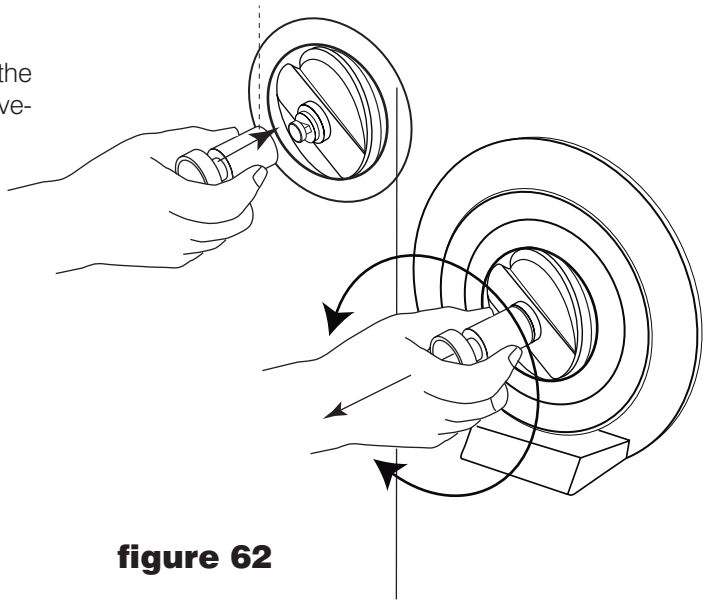

figure 62

Slowly pull out the Archimedes screw and the emulsifying blade taking care to keep them in the horizontal position (Figure 63).

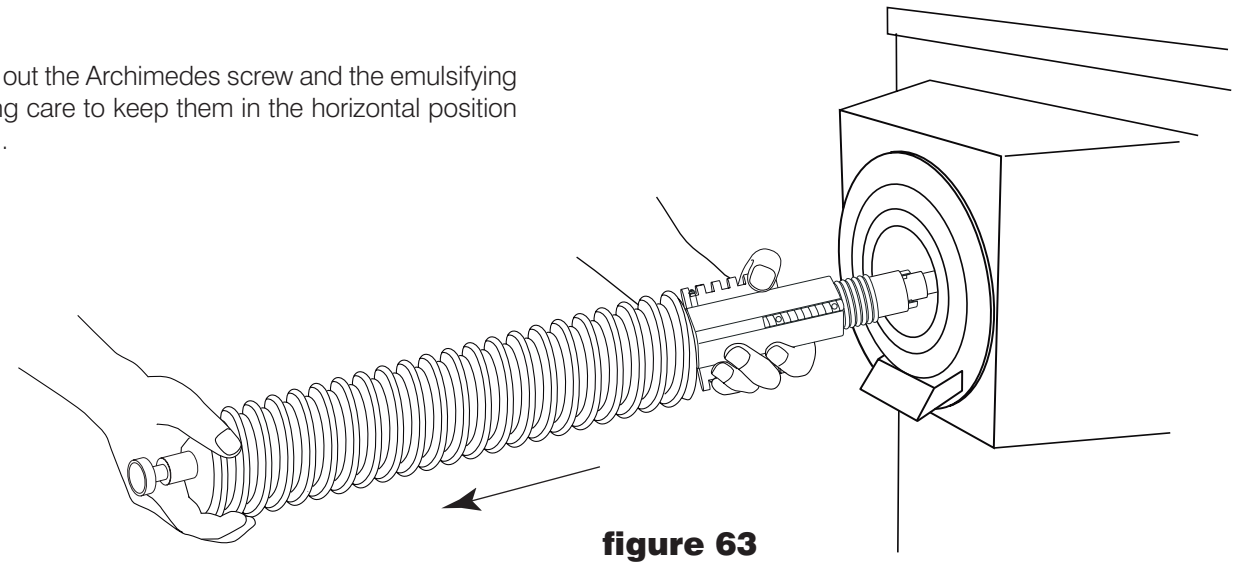

figure 63

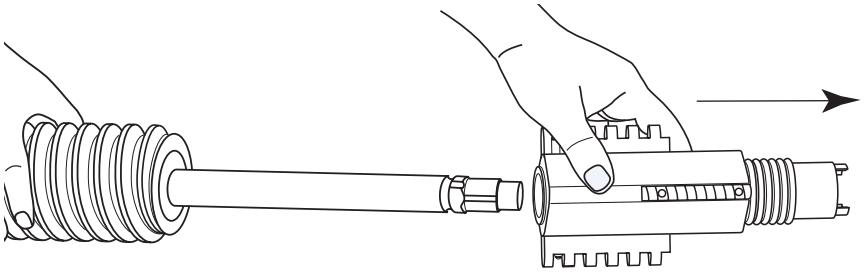

figure 64

Remove the emulsifying blade from the Archimedes screw (Figure 64).

Dismantle the 4 emulsifiers from the emulsifying blade (Figure 65).
SANITIZE AND CLEAN THE ARCHIMEDES SCREW AND EACH
COMPONENT.

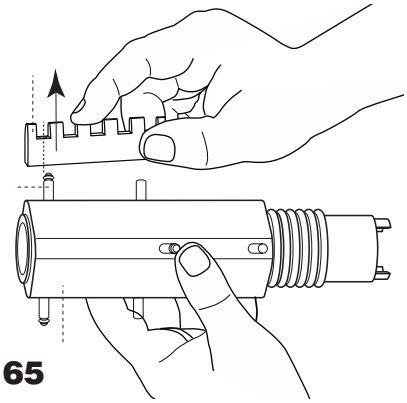

figure 65

After drying the ARCHIMEDES SCREW well store it in the refrigerator
to maintain the temperature.

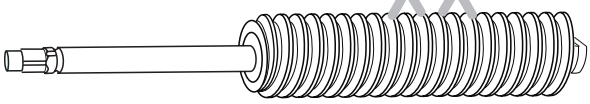

Remove the mixing blade from the tank (Figure 66).

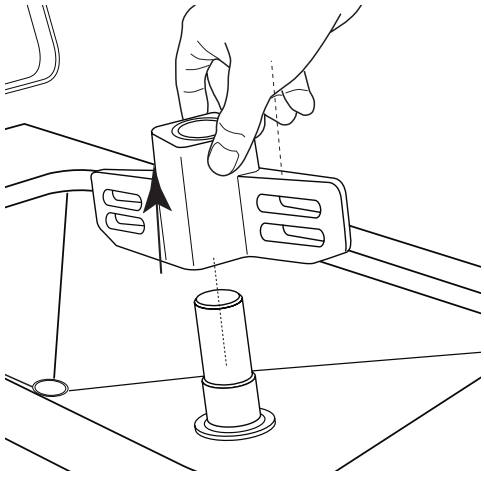

figure 66

Remove the gasket from the pin of the shaft (Figure 67).

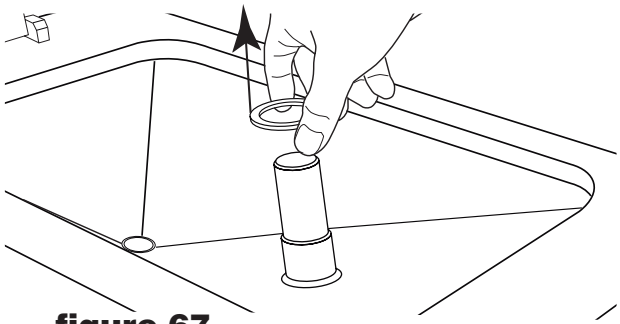

figure 67

Remove the terminal of the rubber tube with the 90° fitting from the hole provided on the rear diaphragm. (Figure 68).
Leave the rubber tube with the filling cap connected to the tank drain.

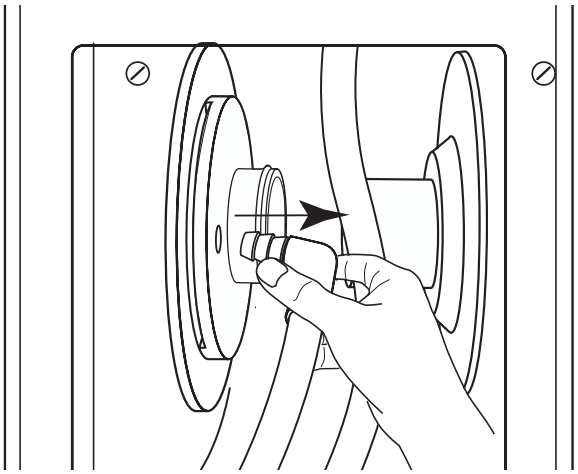

figure 68

Insert the cap on the rear diaphragm to prevent splashing water from penetrating inside the machine (Figure 69).

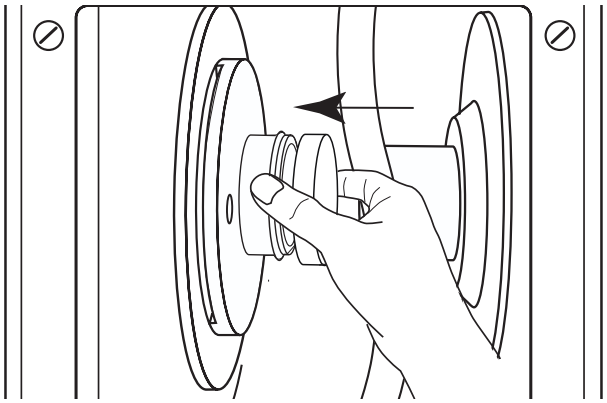

figure 69

With the special shower head placed on the back of the machine thoroughly wash inside the hole with water (Figure 70).

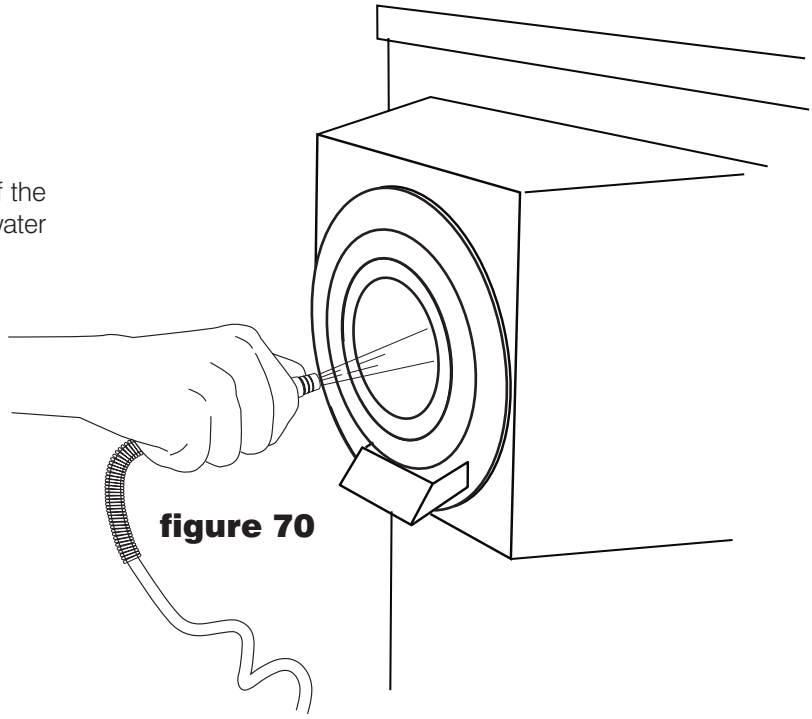

figure 70

With the special shower head thoroughly wash the inside of the tank with water (Figure 71).

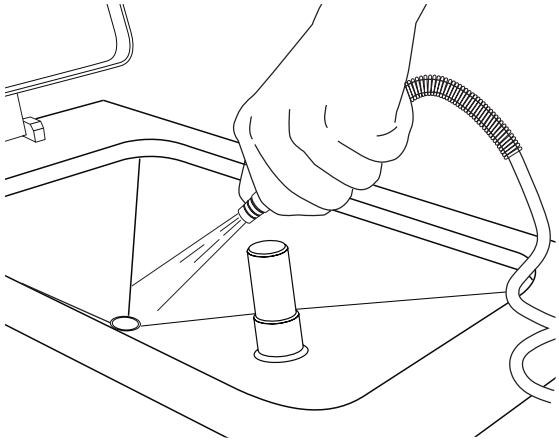

figure 71

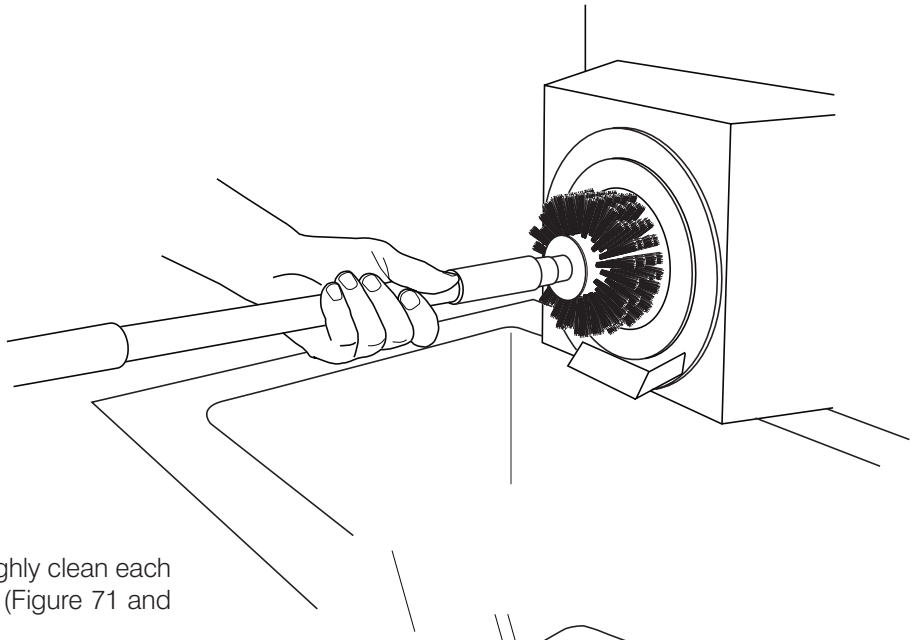

With the special brushes supplied thoroughly clean each hole of the tank and of the batch freezer (Figure 71 and 72).

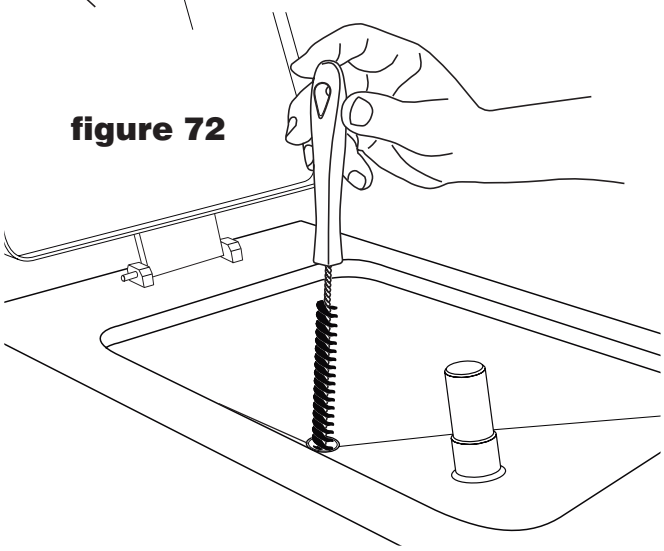

figure 72

Press the" Start pump" button and drain all the water still present in the machine and in the pump hoses (fig. 73).

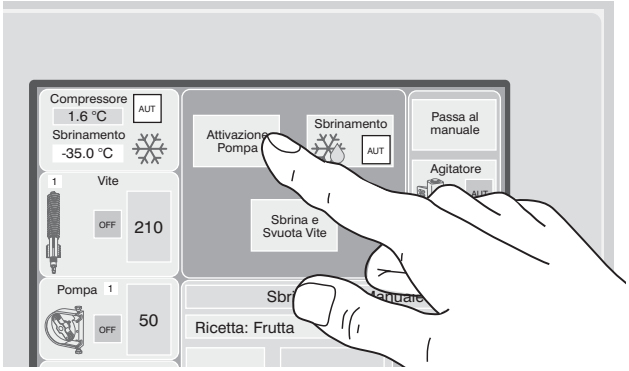

figure 73

Remove the cap from the rear diaphragm (Figure 74).

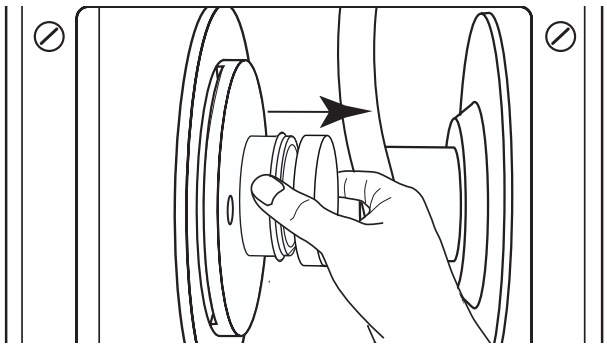

figure 74

Remove the rubber tube with the filling cap connected the drain of the tank (Figure 75).

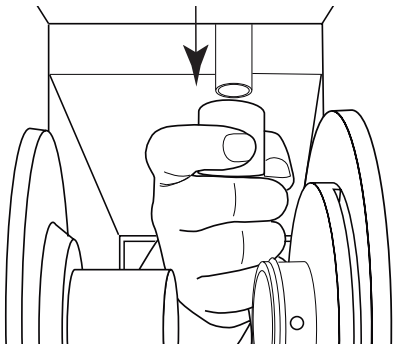

figure 75

Remove the rear diaphragm by rotating anti-clockwise (Figure 76).

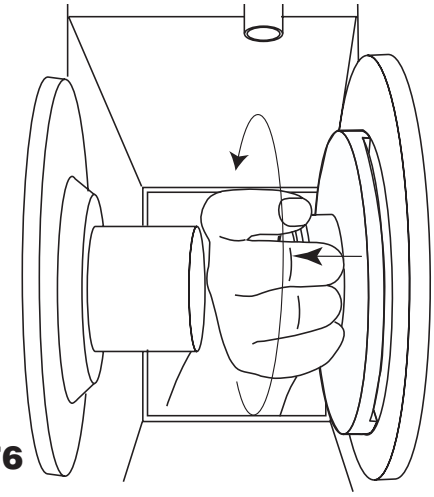

figure 76

Remove the rubber hoses from the pump by unscrewing the locking clamps (figure 77).

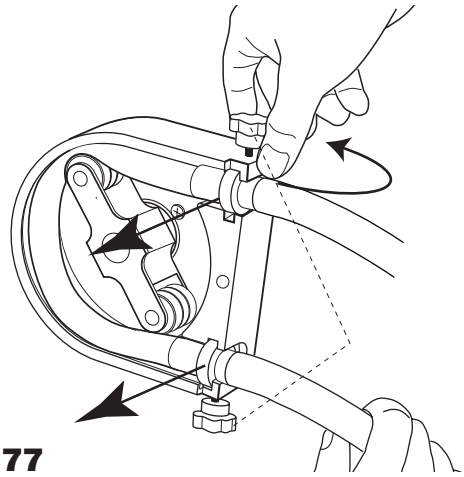

figure 77

Dismantle all fittings and components of the rubber CLEAN AND SANITIZE ALL COMPONENTS WELL (Figure 78).

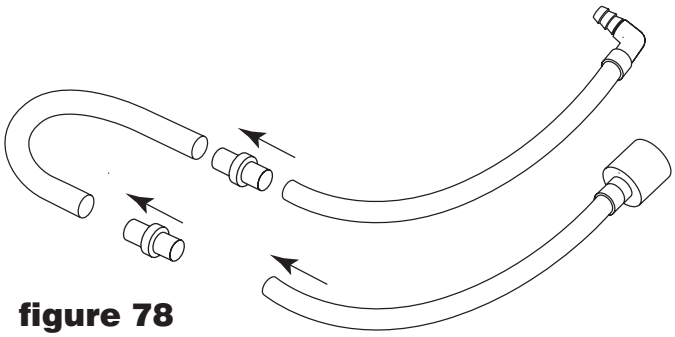

figure 78

Rotate and remove the pump housing and CLEAN IT WELL (Figure 79).

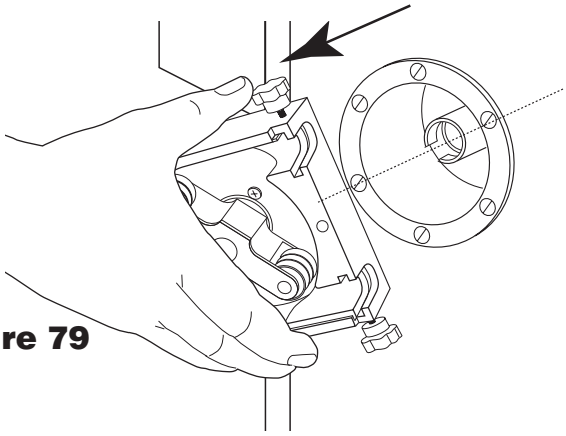

figure 79

Press EXIT on the display to exit all the applications and return to the start page (Fig. 80).

In addition for the safety of the machine:
- DISCONNECT THE ELECTRICAL SOCKET
- SWITCH OFF THE MAIN SWITCH
- CLOSE THE WATER TAP

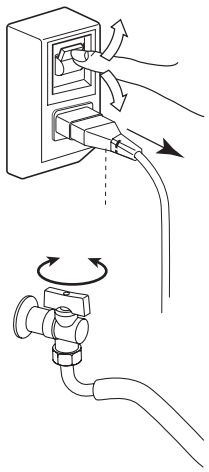

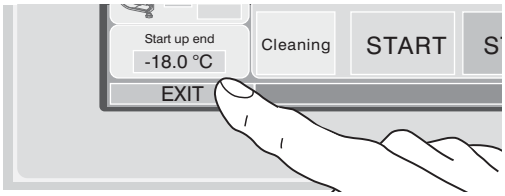

figure 80

6.2 Alarms diagnostics and possible solutions

Some of the main alarms that may appear on the display:

N°	Alarm	Description	Possible solution
1	Compressor phase sequence	Only for models with hermetically sealed compressor. Reverse machine power phases	Invert the two phases of the power supply to the reacted
2	Safety Intervention	The safety systems of the machine have reacted	Restore the emergency button
3	High Pressure	High pressure in the refrigeration circuit	With liquid refrigeration system check the valve opening(s) of the coolant liquid, the presence of the coolant liquid and adequate temperature of the liquid entering in condensation. If the problem persists, contact the customer service.
4	Low pressure	Low pressure in the refrigeration circuit	Possible absence of refrigerant gas. Contact the customer service centre.
5	Compressor protection operation	The motor protection of the compressor has reacted	Reset the motor protector. Check the cooling water. If the problem continues contact the customer service.
6	Blade inverter and screws protection operation	The magnetic safety switch of the screw inverter and the blade has reacted	Reset the circuit breaker. If the problem continues, contact the customer service centre. Possible internal short circuit for the inverter.
7	Screw Inverter Lock Err code <%>	The screw Inverter is locked. For the following reason according to the Err number:	
		04: Motor, thermal overload Motor overload	Lighten the workload of the blade, check the motor ventilation. Press the reset button, if the problem continues contact the customer service centre.
		08: Over temperature (heat sink) Inverter over temperature	Make sure that the ventilation of the machine is efficient. Press the reset button, if the problem continues contact the customer service.
		0E: Phase failure (mains side) Phase failure in power supply	Check the voltage supply of the inverter. Press the reset button, if the problem continues contact the customer service.
		0F: Overcurrent at variable frequency drive output Overcurrent in the inverter output	Screw locked or short-circuit in the cable or in the screw motor. Press the reset button, if the problem continues contact the customer service.
		16 : Internal fan fault Inverter fan fault	Check the cleanliness of the rear heatsink inverter screw. Press the reset button, if the problem continues, contact the service service.
8	8) Blade Inverter Lock Err code <%>	The inverter of the blade is locked. For the following reason according to the Err number:	
		04: Motor, thermal overload Motor overload	Lighten the workload of the blade, check the motor ventilation. Press the reset button, if the problem continues contact the customer service centre
		08: Overtemperature (heat sink) Inverter over temperature	Make sure that the ventilation of the machine is efficient. Press the reset button, if the problem continues contact the customer service.
		0E: Phase failure (mains side) Phase failure in power supply	Check the voltage supply of the inverter. Press the reset button, if the problem continues contact the customer service.
		0F: Overcurrent at variable frequency drive output Overcurrent in the inverter output	Blade blocked or short circuit in the cables or in the blade motor. Press the reset button, if the problem continues contact the customer service.
		16 : Internal fan fault Inverter fan fault	Check the cleanliness of the rear heatsink to the inverter of the blade. Press the reset button, if the problem continues contact the customer service centre.

Some of the main alarms that may appear on the display:

N°	Alarm	Description	Possible solution
10	Emergency Reset Failure	If you press the "Emergency Reset" button on the touch screen panel and the emergency circuits are not restored	Verify that the emergency push button is in the released position. If the problem persists, there may be a problem in electrical circuits, contact the customer service centre
11	High Temperature of Gas - Compressor Fault	Only for models with hermetically sealed compressor, overheating of the compressor is indicated	Wait for the compressor to cool, verify the ventilation of the machine, if the problem continues contact the service service.
12	Exclusion of the screw inverter	The screw inverter was excluded from the operation	Disable the exclusion of machine settings.
13	Exclusion of the blade inverter	The blade inverter was excluded from the operation	Disable the exclusion of machine settings.
14	Screw Inverter not Ready	The screw inverter is not ready to start.	If with the safety circuits inserted the inverter signals "inibit" check the connection of the wires in the 13 terminal connector and the proper functioning of the relay 18KA1 18KA2. Otherwise we may assume an inverter problem. Contact the customer service centre
15	Blade Inverter not Ready	The blade inverter is not ready to start.	If with the safety circuits inserted the inverter signals "inibit" check the connection of the wires in the 13 terminal connector and the proper functioning of the relay 18KA1 18KA2. Otherwise we may assume an inverter problem. Contact the customer service centre
20	Error in Evaporator Probe	Fault or wires disconnected in the evaporator probe	Check the connections. Alternatively contact the service centre for the replacement of the probe
21	Error in the Internal Machine Probe	Fault or wires disconnected in the internal panel of the machine	Check the connections. Alternatively contact the service centre for the replacement of the probe
22	High-temperature of the machine	The temperature inside the electrical panel is too high.	Check the efficiency of the ventilation of the machine, extraction fans and cleaning filters. If any problem persists, contact the customer service centre.
23	High-temperature of the screw inverter	The temperature of the screw inverter is high	Check the efficiency of the ventilation of the machine, extraction fans and cleaning filters. In particular pay attention to the heat sinks of the inverters. If the problem continues contact the customer service.
24	High-temperature of the blade inverter	The temperature of the blade inverter is high	Check the efficiency of the ventilation of the machine, extraction fans and cleaning filters. In particular pay attention to the heat sinks of the inverters. If the problem continues contact the customer service.
25	No communication with the screw inverter	The touch screen does not communicate with the screw inverter.	Make sure the RJ45 connector is connected to the inverter of the blade. Switch off and switch on the machine. If the problem continues contact the customer service
26	No communication with the blade inverter	The touch screen does not communicate with the blade inverter.	Make sure the RJ45 connector is connected to the inverter of the blade. Switch off and switch on the machine. If the problem continues contact the customer service
27	No communication with mode I/O	The touch screen does not communicate with the input/output module in the electrical panel	Switch off and switch on the machine. Check the connection of the communication cable in the I/O module. If the problem continues contact the customer service
30	Provide Maintenance	The machine has worked for a number of hours, which require routine maintenance	Contact the customer service center

6.3 Components and spare parts of the BATCH FREEZER GROUP

Quote the codes shown to request any spare parts, quantity and the instructions specified by the manufacturers.

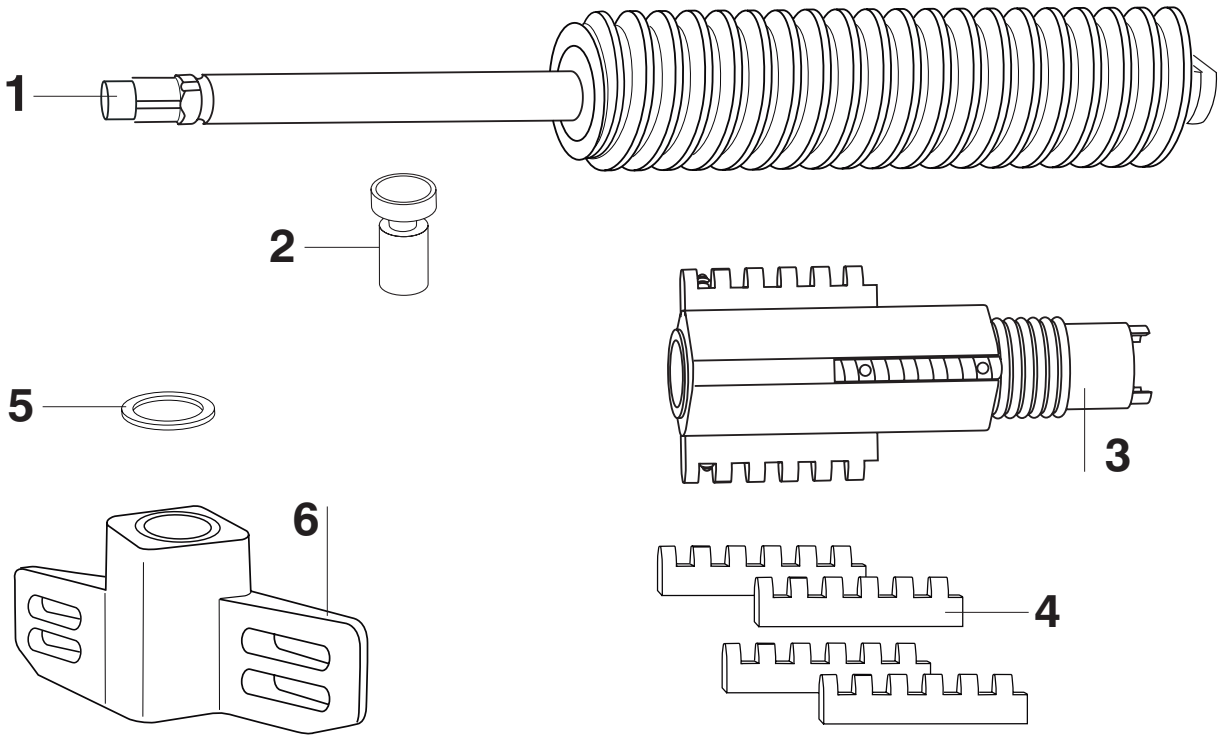

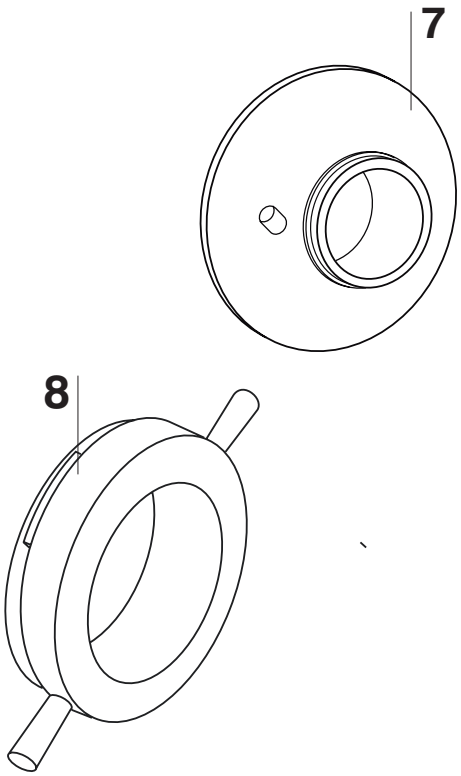

1) Art. A0000553
n°1 ARCHIMEDES SCREW

2) Art. A0000254
n°1 WRENCH for Archimedes screw

3) Art. A0000060
n°1 EMULSIFYING BLADE

4) Art. P0000315
n°4 EMULSIFIERS

5) Art. P0001060
n°1 SEAL

6) Art. P0000667
n°1 MIXING BLADE

7) Art. P0001075
n°1 FRONT DIAPHRAGM

8) Art. A0000298
n°1 REAR DIAPHRAGM

Components and spare parts of the PUMP GROUP

Quote the codes shown to request any spare parts, quantity and the instructions specified by the manufacturers.

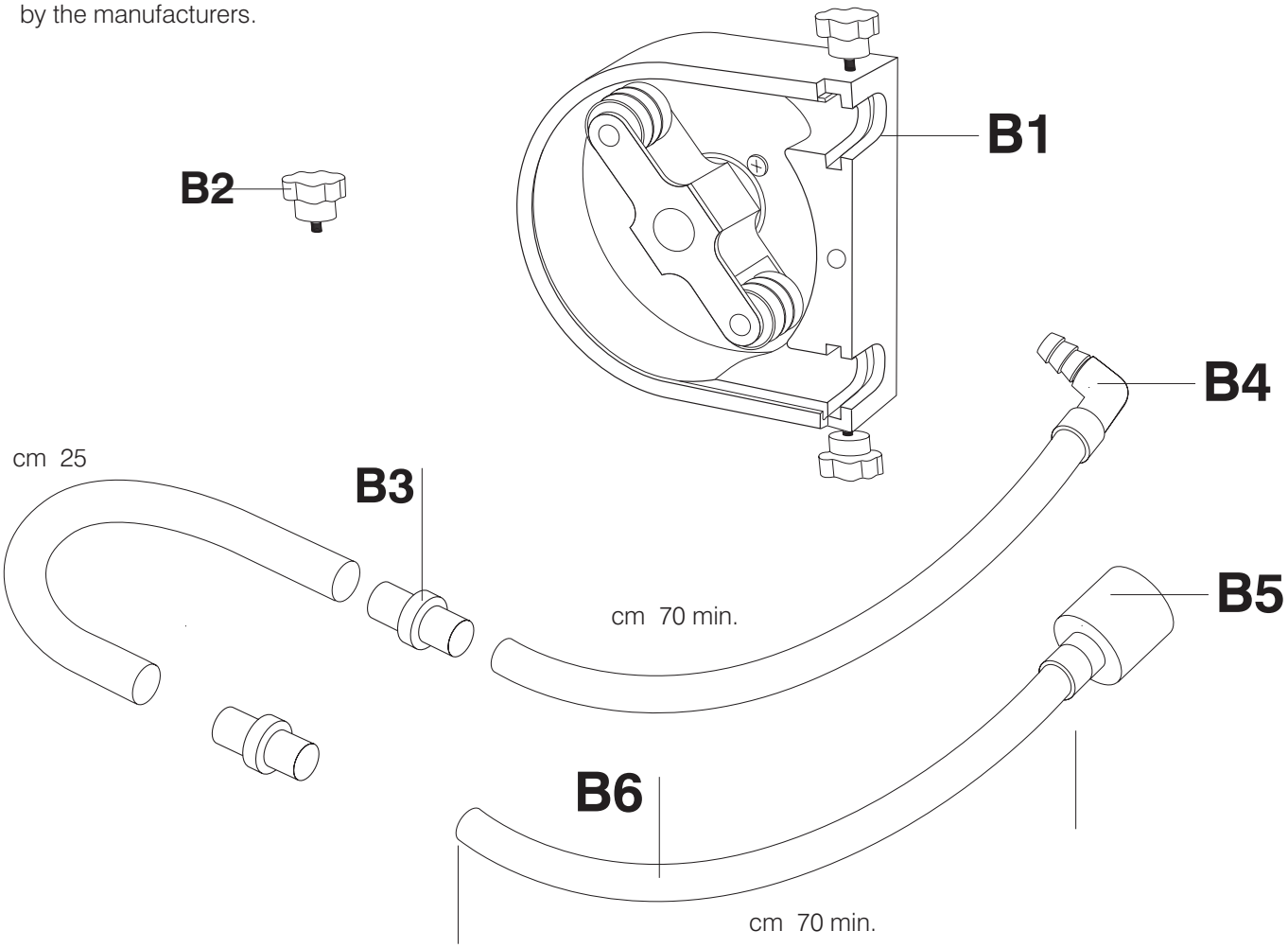

B1 - Art. 711.524.00
n°1 PUMP

B2 - Art. C4000058
n°3 pcs. KNOBS

B3 - Art. P0001098
n°2 pcs. NIPPLES FITTINGS

B4 - Art. C4000112
n°1 ELBOW FITTING

B5 - Art. P0001514
n°1 FUNNEL FITTING

B6 - Art. C0000003
2.5 mt of RUBBER HOSE
to be cut to size (see drawing)
according to requirements

SEAL RINGS FOR DIAPHRAGMS

Quote the codes shown to request any spare parts, quantity and the instructions specified by the manufacturers.

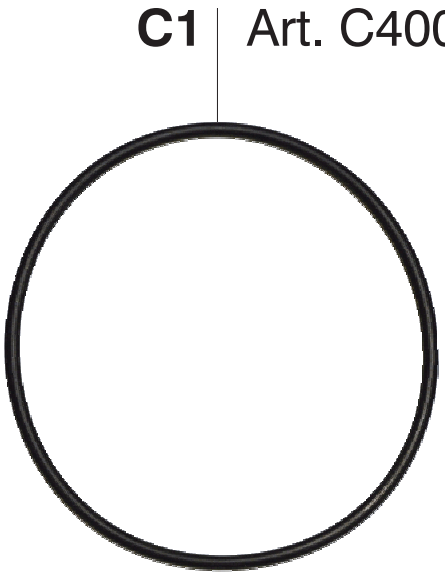

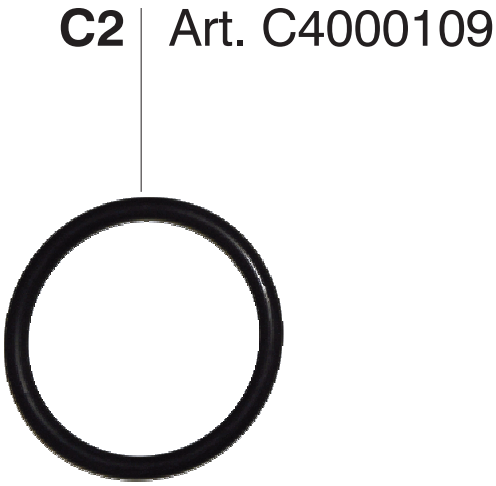

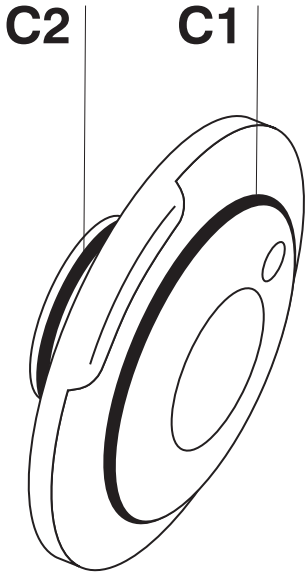

For: **REAR DIAPHRAGM**

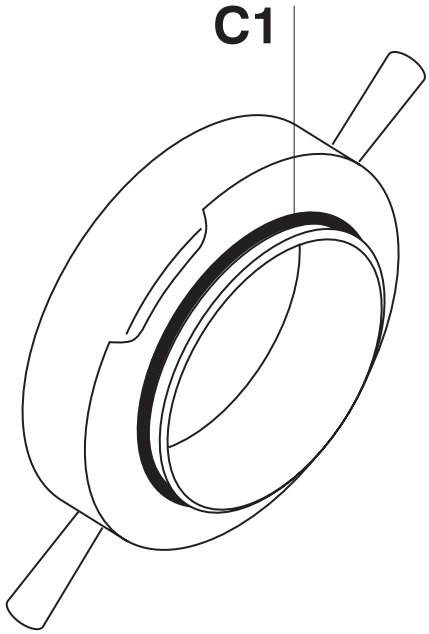

FRONT DIAPHRAGM

SEAL RINGS EMULSIFYING BLADE AND FITTINGS

Quote the codes shown to request any spare parts, quantity and the instructions specified by the manufacturers.

C3 Art. C4000050

C4 Art. C4000101

C5 Art. C4000051

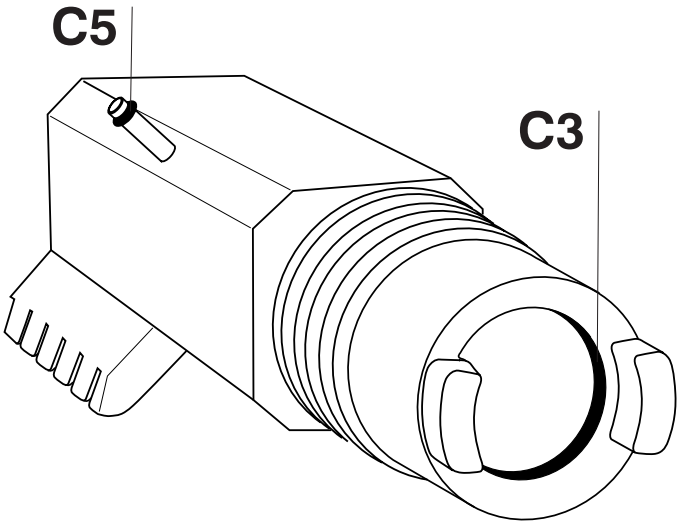

For: **EMULSIFYING BLADE**

FUNNEL FITTING FOR TANK DRAIN

LA NUOVAGEL
THE EVOLUTION OF ICE CREAM

LA NUOVAGEL srl
Via Padania, 9c
31020 San Vendemiano (TV) – Italia
Tel. +39 0438 489097
Fax +39 0438 488807
mail: info@lanuovagel.com
www.lanuovagel.com